PFAFF® Industrial

POWERLine

2571 ME PLUS / PREMIUM
2574 ME PLUS / PREMIUM

SERVICE MANUAL

2591 ME PLUS / PREMIUM

This service manual applies to machines from software version **0389/001** and serial number **2 766 760** onwards →

296-12-19 129/002
Justieranleitung dtsch. 01.11

The reprinting, copying or translation of PFAFF Service Manuals, whether in whole or in part, is only permitted with our previous authorization and with written reference to the source.

PFAFF Industriesysteme
und Maschinen AG

Hans-Geiger-Str. 12 - IG Nord
D-67661 Kaiserslautern

Contents ..... Page

1	**Adjustment**	**5**
1.01	Notes on adjustment	5
1.02	Tools, gauges and other accessories for adjusting	5
1.03	Abbreviations	5
1.04	Explanation of the symbols	5
1.05	Adjusting the basic machine	6
1.05.01	Basic position of the balance wheel (adjustment aid)	6
1.05.02	Balance weight	7
1.05.03	Needle position in the direction of sewing (on the 2571 ME and 2591 ME)	8
1.05.04	Needle position in the direction of sewing (on the 2574 ME)	9
1.05.05	Limiting the needle bar frame (not applicable for 2574 ME)	10
1.05.06	Preliminary adjustment of the needle height	11
1.05.07	Needle rise, hook clearance, needle height and needle guard (on the PFAFF 2571 ME)	12
1.05.08	Needle rise, hook clearance, needle height and needle guard (on the PFAFF 2574 ME)	14
1.05.09	Needle rise, Gripper distance, Needle height and Needle guard (on the PFAFF 2591 ME)	16
1.05.10	Needle position crosswise to sewing direction (on the PFAFF 2571 ME)	18
1.05.11	Needle position crosswise to sewing direction (on the PFAFF 2574)	19
1.05.12	Needle position crosswise to sewing direction (on the PFAFF 2591 ME)	20
1.05.13	Height and stroke of the bobbin case opener	21
1.05.14	Height of the feed wheel (on the 2571 ME)	22
1.05.15	Height of the feed wheel (on the 2574)	23
1.05.16	Height of the feed wheel (on the 2591)	24
1.05.17	Roller-presser	25
1.05.18	Clearance between roller presser and feed wheel	26
1.05.19	Knee lever	27
1.05.20	Tension release	28
1.05.21	Thread check spring and thread regulator	29
1.05.22	Bobbin winder	30
1.05.23	Sewing foot pressure	31
1.05.24	Lubrication	32
1.05.25	Re-engaging the slip-clutch	33
1.06	Adjusting the edge trimmer -725/04	34
1.06.01	Position of the knife holder on model 2571	34
1.06.02	Position of the knife holder on model 2591	35
1.06.03	Knife stroke on model 2571 ME	36
1.06.04	Knife stroke on model 2591 ME	37
1.06.05	Cutting stroke on model 2571 ME	38
1.06.06	Cutting stroke on model 2591 ME	39

Contents ..... Page

1.06.07	Knife position	40
1.07	Adjusting the thread trimmer -900/81	41
1.07.01	Resting position of the roller lever / radial position of the control cam	41
1.07.02	Position of the thread catcher holder	42
1.07.03	Distance between thread catcher and needle plate	43
1.07.04	Position of the thread catcher	44
1.07.05	Knife position and knife pressure	45
1.07.06	Bobbin thread retaining spring	46
1.07.07	Manual cutting test	47
1.07.08	Linkage rod (only for the PFAFF 2574 ME)	48
1.08	**List of parameters for control P320 / P321**	**49**
1.09	Error Messages and Description	54
1.10	Motor Errors	55
1.11	Updating the machine software via internet	56
1.11.01	Updating 2500 ME PLUS (with null modem cable)	56
1.11.02	Updating 2500 PREMIUM (with SD card)	57
2	Circuit diagrams	59

1 Adjustment

Please observe all notes from Chapter **1 Safety** of the instruction manual!
In particular care must be taken to see that all protective devices are refitted properly after adjustment, see Chapter **1.06 Danger warnings** of the instruction manual!

If not otherwise stated, the machine must be disconnected from the electrical power supply. Danger of injury due to unintentional starting of the machine!

1.01 Notes on adjustment

All following adjustments are based on a fully assembled machine and may only be carried out by expert staff trained for this purpose.
Machine covers, which have to be removed and replaced to carry out checks and adjustments, are not mentioned in the text.
The order of the following chapters corresponds to the most logical work sequence for machines which have to be completely adjusted. If only specific individual work steps are carried out, both the preceding and following chapters must be observed.
Screws, nuts indicated in brackets ( ) are fastenings for machine parts, which must be loosened before adjustment and tightened again afterwards.

1.02 Tools, gauges and other accessories for adjusting

- Screwdrivers with blade width from **2** to **10 mm**
- Spanners (wrenches) with jaw width from **7** to **14 mm**
- **1** set Allen keys from **1.5** to **6 mm**
- Setting gauge (Needle position in sewing direction Order No. **61-111 641-48**)
- Step gauge
- Metal rule (part No. **08-880 218-00**)
- Sewing thread and test materials

1.03 Abbreviations

t.d.c. = top dead centre
b.d.c. = bottom dead centre

1.04 Explanation of the symbols

In this adjustment manual, symbols emphasize operations to be carried out or important information. The symbols used have the following meaning:

Note, information

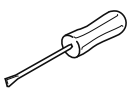

Service, repair, adjustment, maintenance
(work to be carried out by qualified staff only)

1.05 Adjusting the basic machine

1.05.01 Basic position of the balance wheel (adjustment aid)

Requirement
When the needle bar is positioned at t.d.c., the marking "**0**" on the scale should be level with the top edge of the belt guard (see arrow).

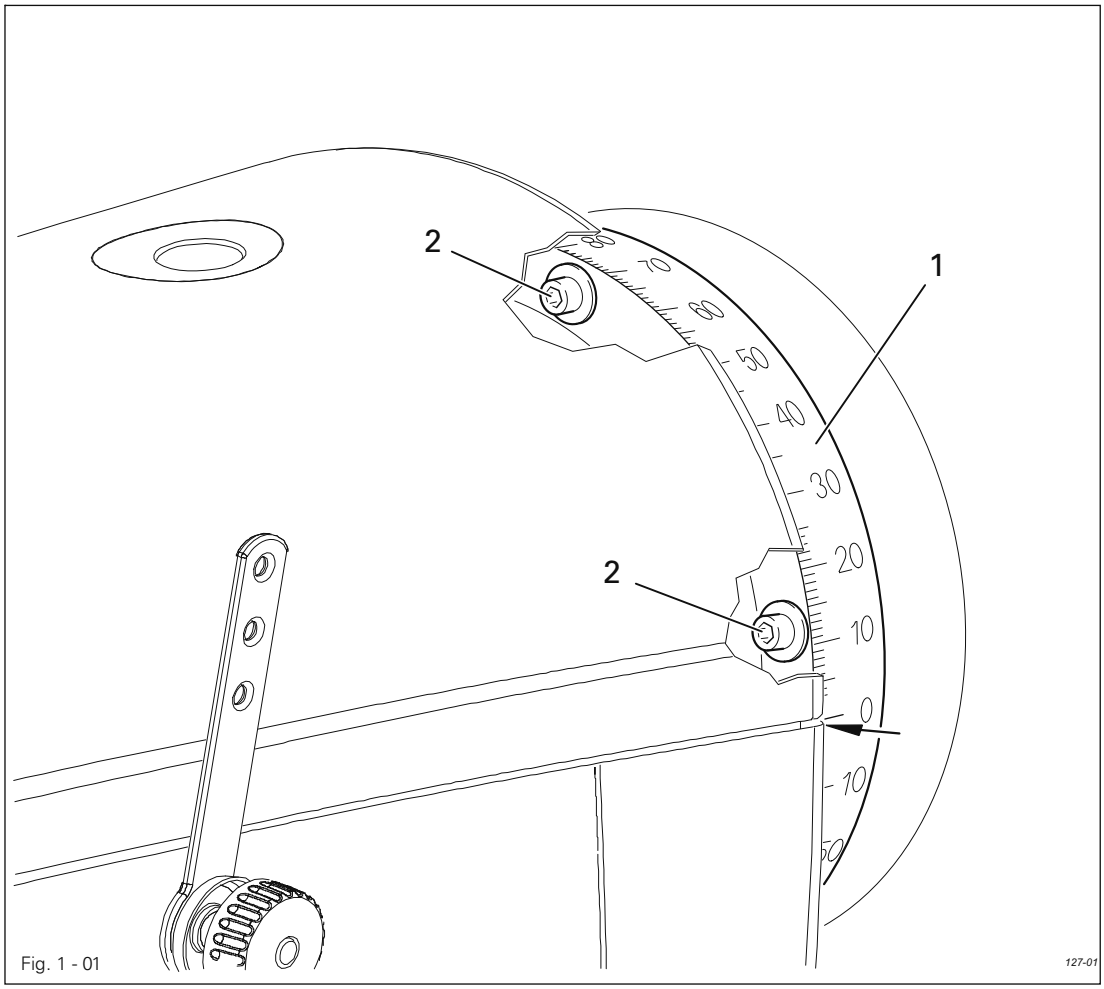

Fig. 1 - 01

Adjust the scale dial **1** (four screws **2**) in accordance with the **requirement**.

1.05.02 Balance weight

Requirement
When the needle bar is positioned at b.d.c. (balance wheel position **180**°) the largest eccentricity of the balance weight **1** should be at the top.

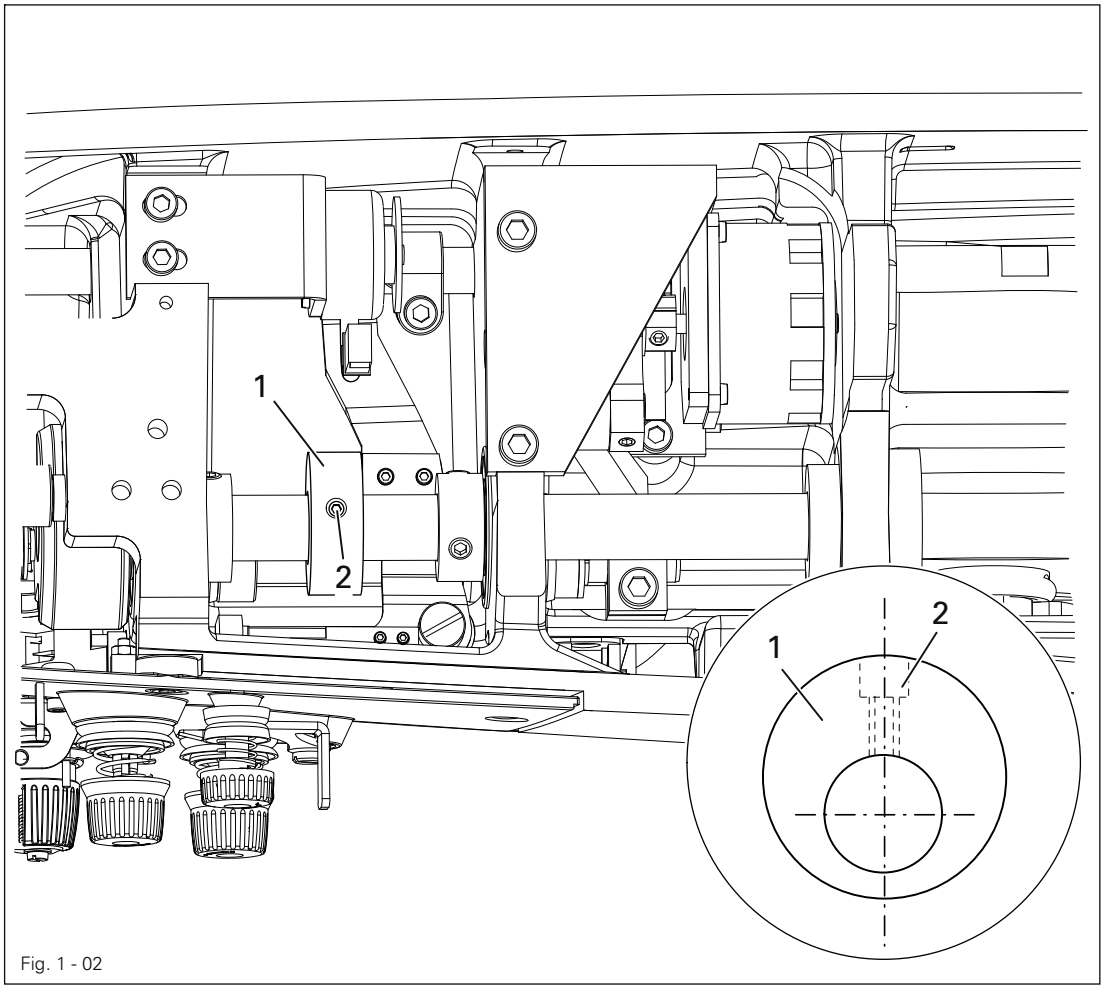

Fig. 1 - 02

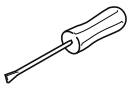

- Adjust balance weight **1** (screw **2**) in accordance with the **requirement**.

1.05.03 Needle position in the direction of sewing (on the 2571 ME and 2591 ME)

Requirement
With the stitch length set at "5", in its front and rear point of reversal the needle should be the same distance from the inside edges of the needle hole.

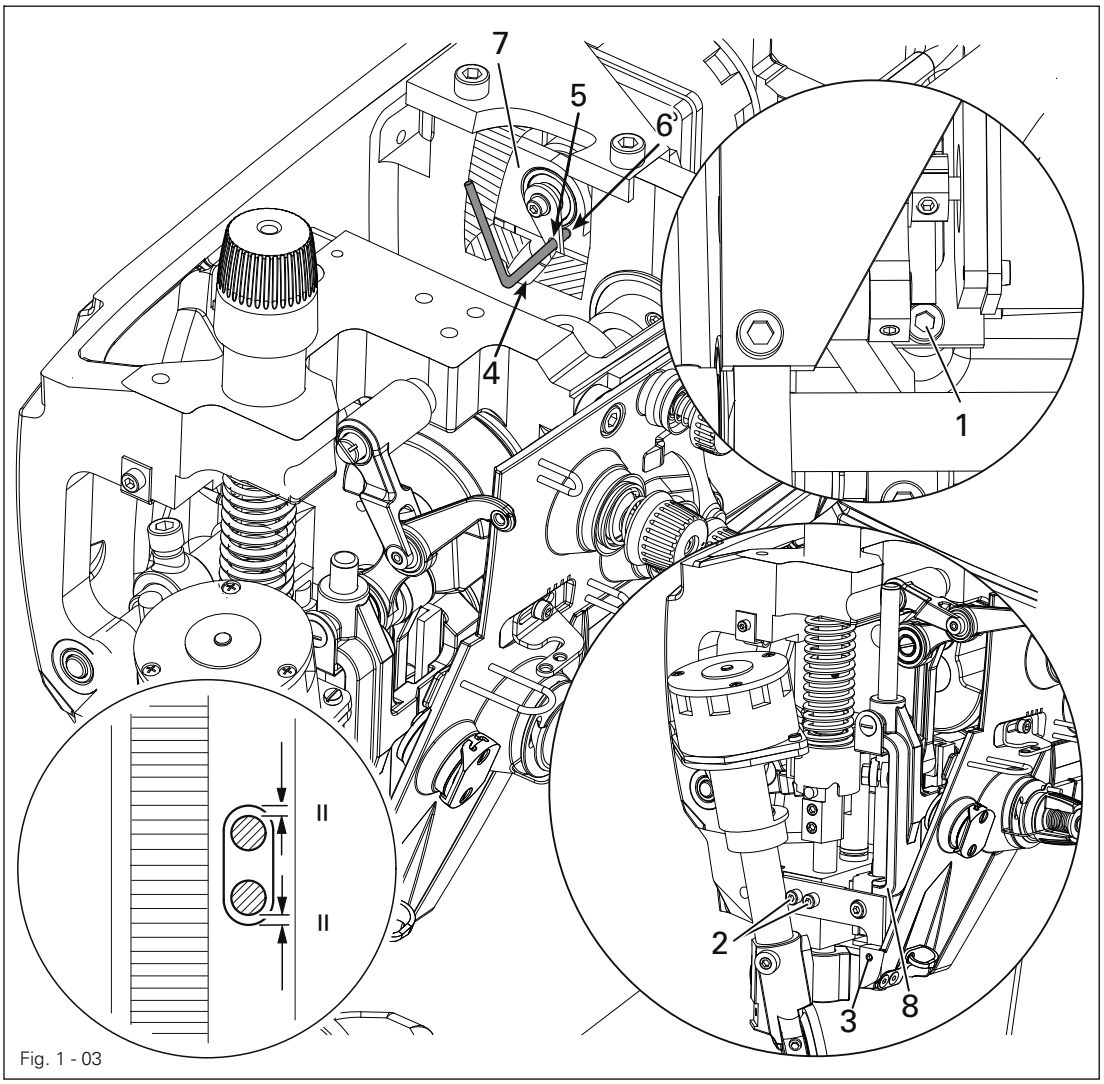

Fig. 1 - 03

- Turn on machine and set stitch length to "5".
- Turn machine off and on (synchronise needle bar to stitch length).
- Sew a stitch and check the rear position of the needle according to the requirement.
- Press the stitch control key, sew a stitch and check the forward position of the needle according to the requirement and where necessary make the following adjustments.
- Turn off machine and loosen screws 1, 2 and 3.
- Push the adjusting pin's angled part (Order No. 61-111Snnb641-48 through hole 4 and 5 into the hole 6 of the bearing block 7.
- Move the needle bar frame 8 according to the requirement and tighten screw 1.
- Check according to the requirement.
- Screws 2 and 3 remain loosened for the subsequent adjustment.

1.05.04 Needle position in the direction of sewing (on the 2574 ME)

Requirement
The needle must penetrate the middle of the needle hole as viewed in the direction of sewing.

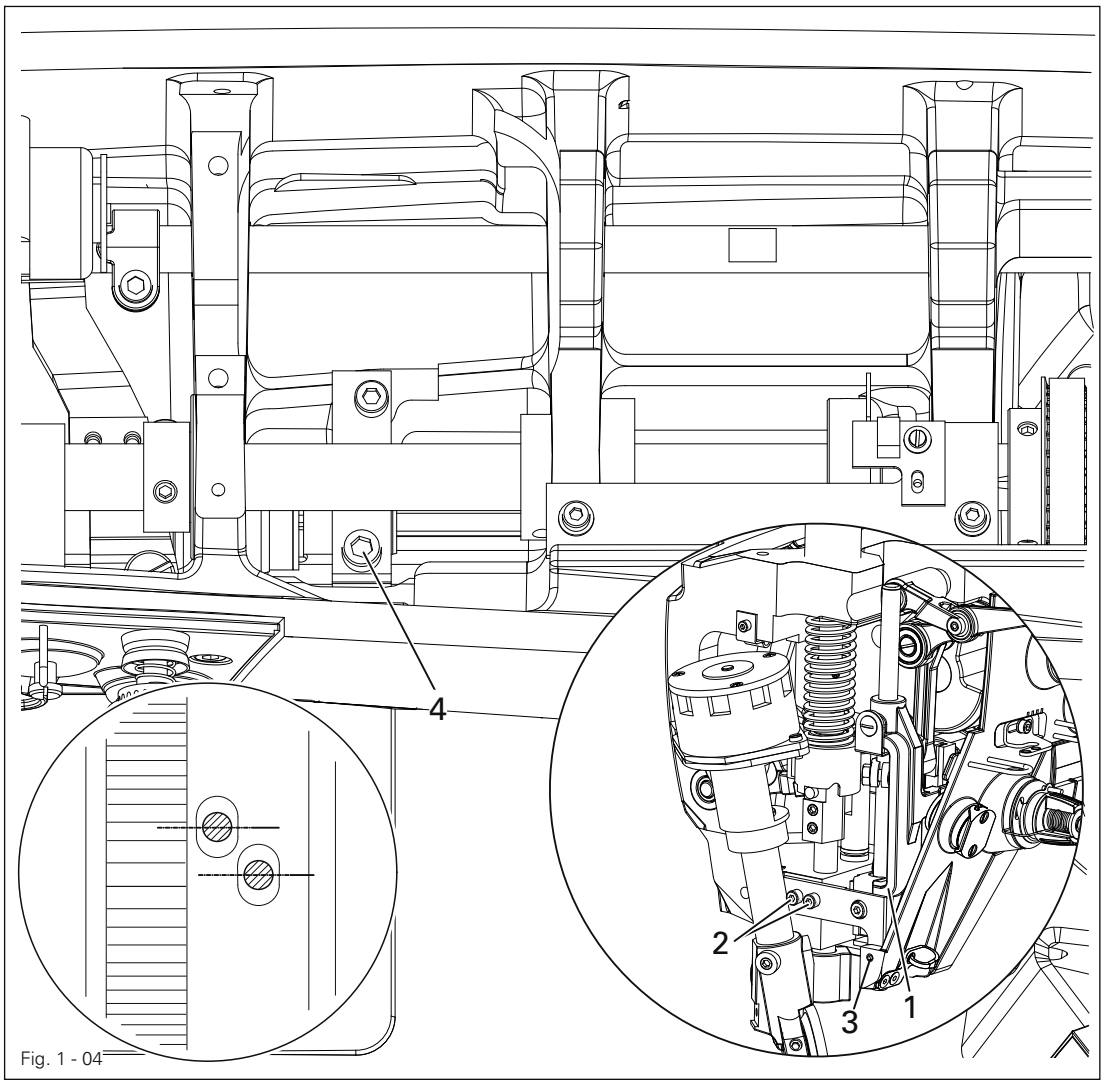

Fig. 1 - 04

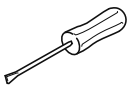

- Move the needle bar frame **1** (screws **2**, **3** and **4**) in accordance with the requirement.

1.05.05 Limiting the needle bar frame (Not applicable for PFAFF 2574 ME.)

Requirement
With the stitch length set at "**5**", when the needle is in its front and rear point of reversal screw **4** should be the same distance from the inside edge of its hole.

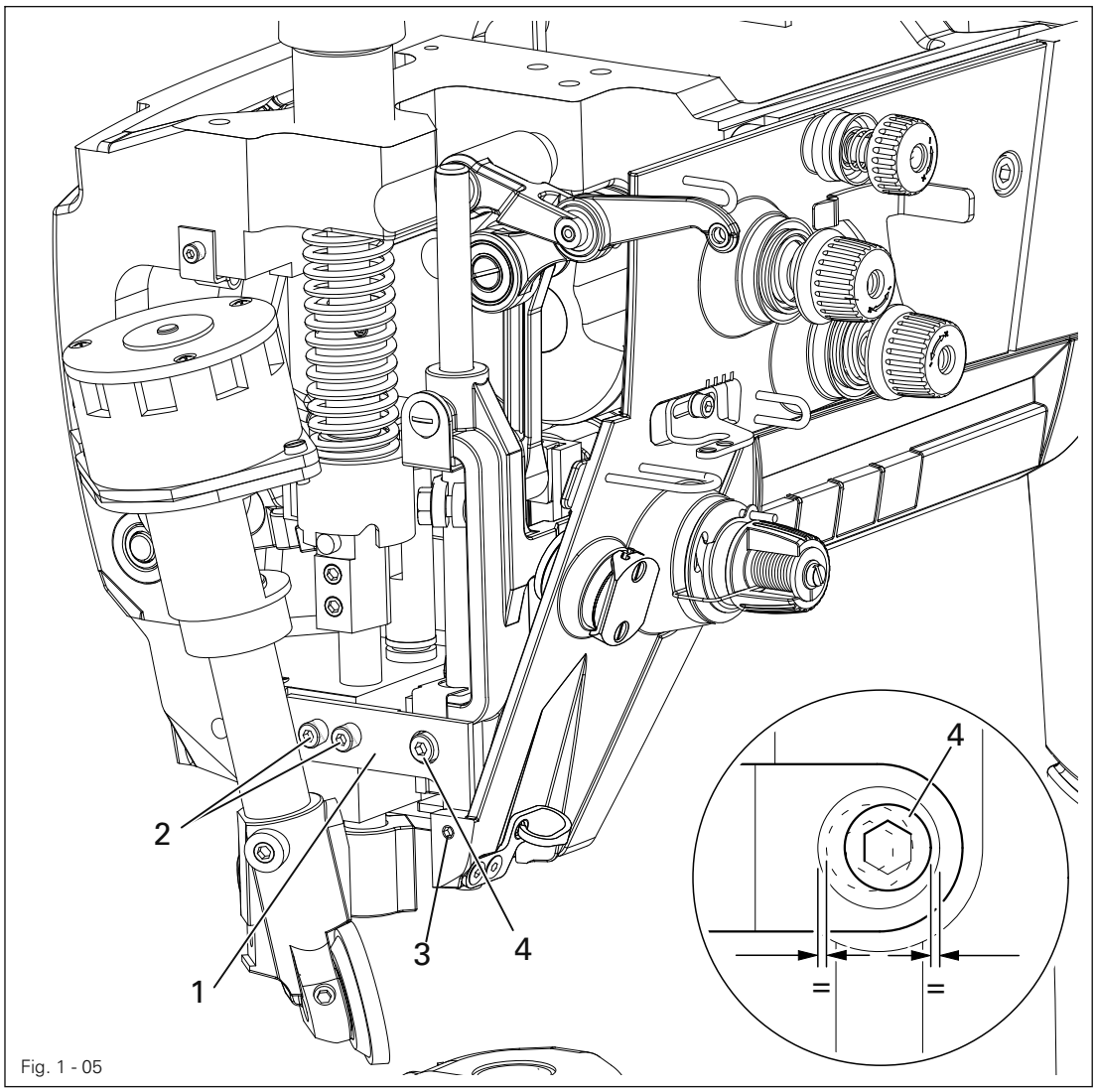

Fig. 1 - 05

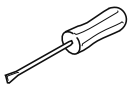

- Set stitch length to "**5**".
- Select parameter **605**.
- Turn the handwheel in the direction of rotation and check the "requirement".
- If necessary move regulating bow **1** (screw **2** and **3**).

1.05.06 Preliminary adjustment of the needle height

Requirement
When the needle bar is positioned at t.d.c. (handwheel position **0**°) there should be a gap between upper edge needle bar and upper edge needle pendulum of about **54 mm (2571/91) or 58 mm. (2574)**

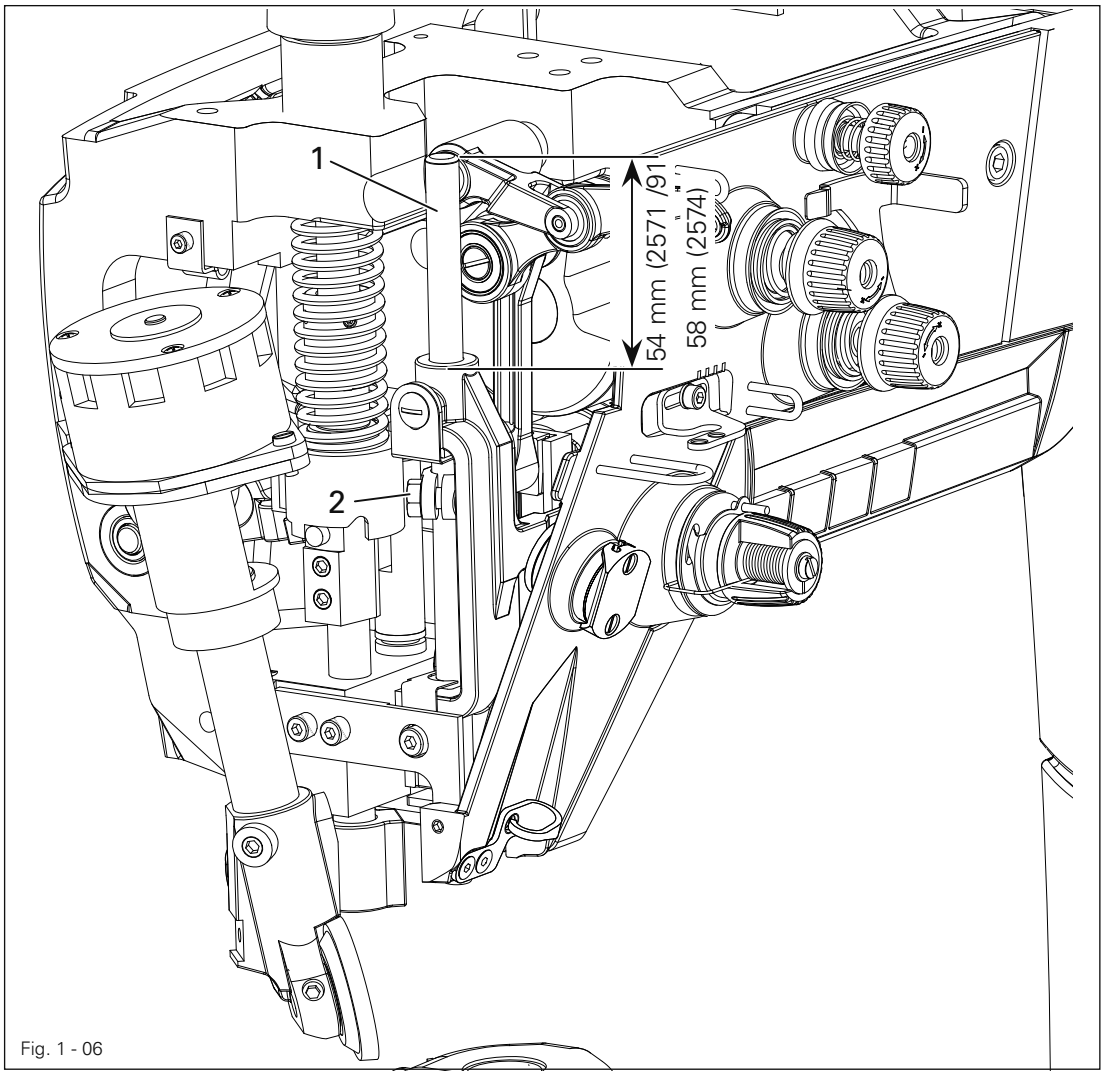

Fig. 1 - 06

- Without turning it, re-position needle bar **1** (screw **2**) in accordance with the **requirement**.

1.05.07 Needle rise, hook clearance, needle height and needle guard (on the PFAFF 2571 ME)

Requirement

With the needle bar positioned **2.0 mm** after BDC (balance wheel position **202°)** and the stitch length set at "**0.8**"

1. the hook point must be at needle centre with a hook-to-needle clearance of **0.05** to **0.1 mm**;
2. the top of the needle eye must be **0.8** to **1.0 mm** below the hook point;
3. the needle guard **7** must touch the needle lightly.

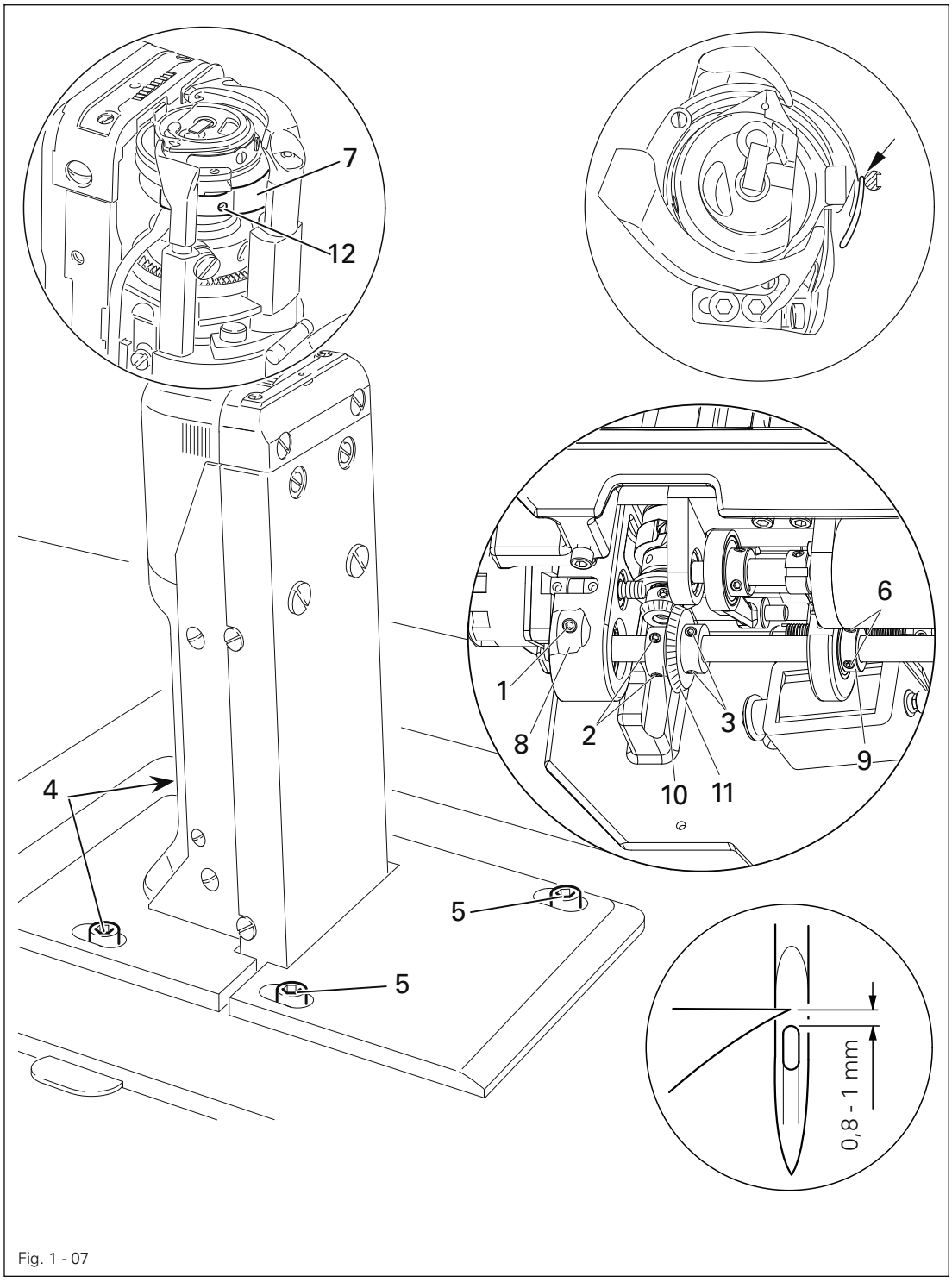

Fig. 1 - 07

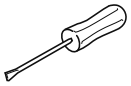

- Set stitch length at "0.8".
- Loosen screws 1, 2, 3, 4 and 5 .
- Select parameter 605.
- Unscrew the needle plate.
- Turn the handwheel four times in the direction of rotation.
- Bring the handwheel into position 202° (= needle bar position 2.0mm after b.d.c.)
- Set the hook point on the middle of the needle. Take care that the needle is not squeezed by needle guard 7.
- Adjust the needle height according to requirement 2, cf. chapter 1.05.05 Preliminary Adjustment of Needle Height.
- Move hook post according to requirement 1 and tighten screws 4 and 5.
- Move collar 8 into contact and tighten screw 1.
- Move collar 9 into contact and tighten screw 6
- Tighten screws 3 allowing for bevel gear wheel movement.
- Move collar 10 up against bevel gear wheel 11 and tighten screws 2
- Adjust needle guard 7 (screw 12) according to rule 3.

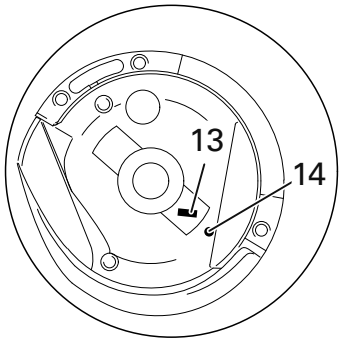

When changing a clamp take care that the markings 13 and 14 are on one side.

1.05.08 Needle rise, hook clearance, needle height and needle guard (on the PFAFF 2574 ME)

Requirement

With the needle bar positioned **2.0 mm** after BDC on both hook (balance wheel position **202°)** and the stitch length set at "**0.8**"

1. the hook point must be at needle centre with a hook-to-needle clearance of **0.05** to **0.1 mm**;
2. the top of the needle eye must be **0.8** to **1.0 mm** below the hook point;
3. the needle guard **9** must touch the needle lightly.

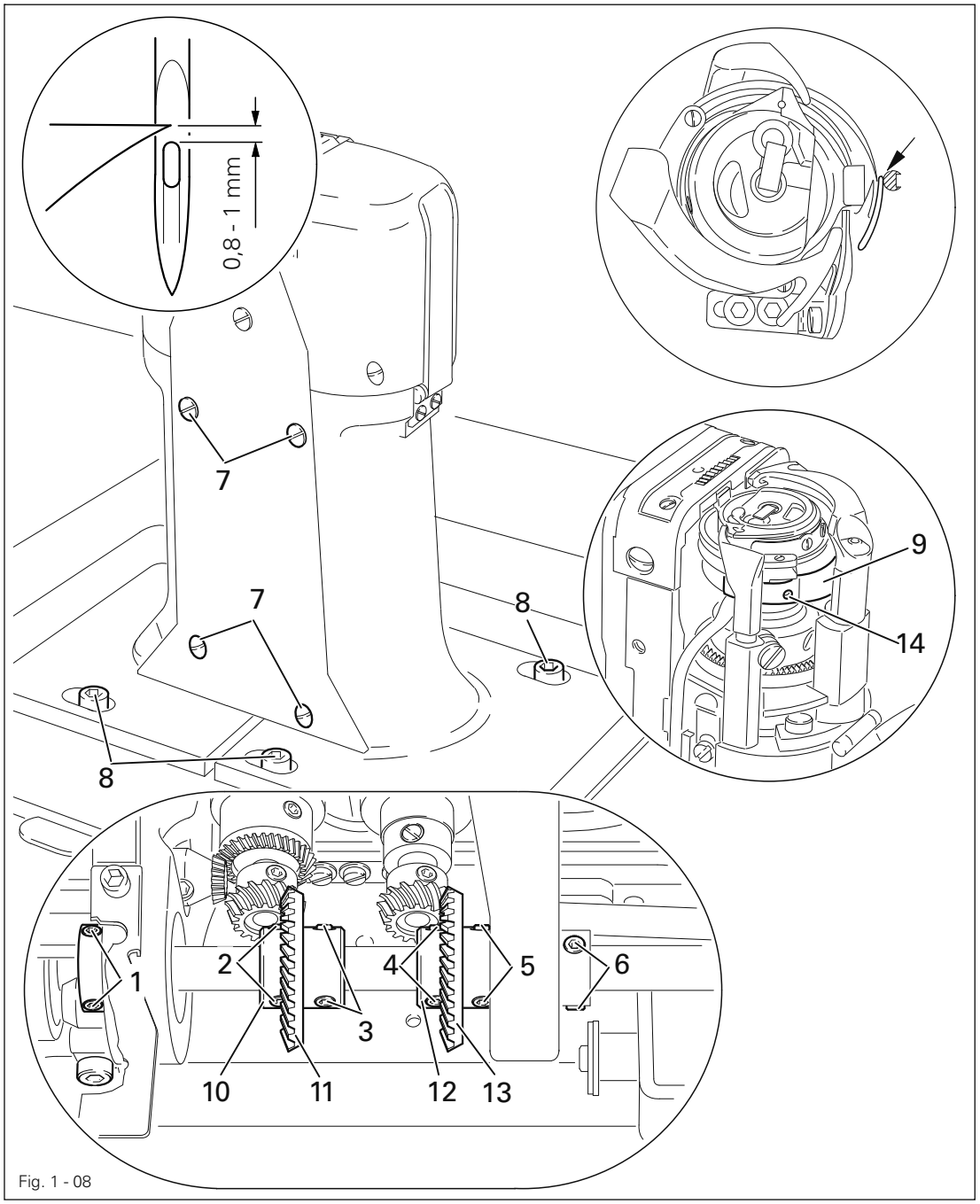

Fig. 1 - 08

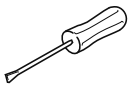

- Loosen screws **1**, **2**, **3**, **4**, **5**, **6** and **7**.
- Loosen screws **8** slightly.
- Select parameter **605**.

- Unscrew the needle plate.
- Turn the handwheel four times in the direction of rotation.
- Bring the handwheel into position 202° (= needle bar position 2.0mm after b.d.c.)
- Set both hook points to the centre of the needle, taking care to see that the needles are not deflected by needle guard 9.
- Set the needle height in accordance with requirement 2, compare Chapter 1.05.05 Pre-adjusting the needle height.
- Adjust both hook posts in accordance with requirement 1 and tighten screws 8.
- Tighten screws 1 and 6.
- Taking the play of the bevel gear into consideration, tighten screws 3 and 5.
- Move adjustment ring 10 against bevel gear 12 and tighten screws 2.
- Move adjustment ring 12 against bevel gear 13 and tighten screws 4.
- Tighten screws 7 on both sides of the post.
- Adjust needle guard 9 (screw 14) on both hooks in accordance with requirement 3.

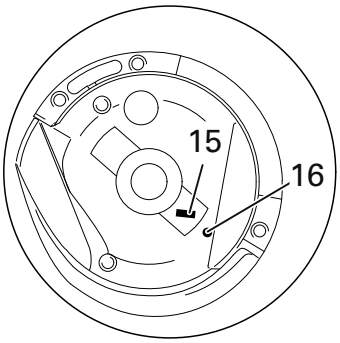

When the hook is changed, make sure that markings 15 and 16 are on one side.

1.05.09 Needle rise, Gripper distance, Needle height and Needle guard (on the PFAFF 2591 ME)

Requirement

With the needle bar positioned **2.0 mm** after BDC (balance wheel position **202°)** and the stitch length set at "**0.8**"

1. the hook point must be at needle centre with a hook-to-needle clearance of **0.05** to **0.1 mm**;
2. the top of the needle eye must be **0.8** to **1.0 mm** below the hook point;
3. the needle guard **6** must touch the needle lightly.

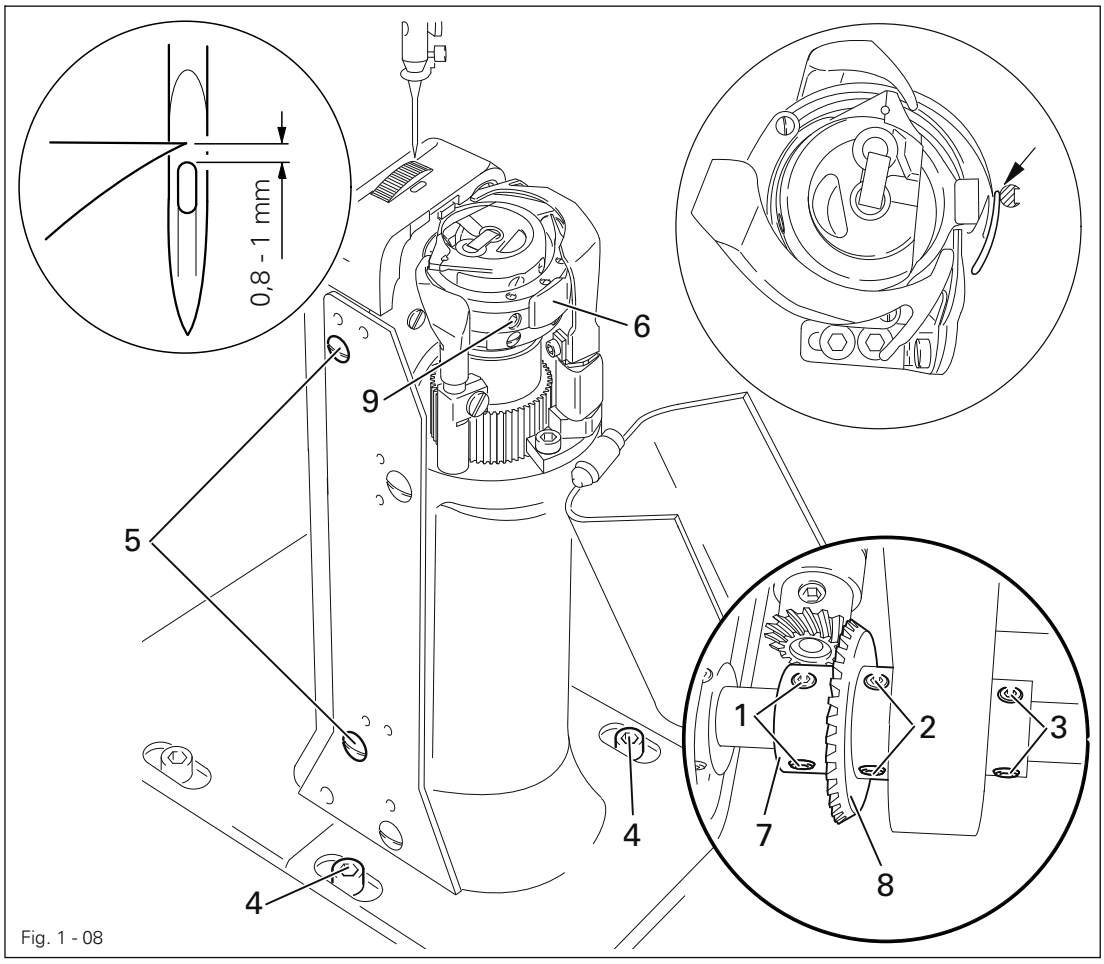

Fig. 1 - 08

- Set stitch length at "**0.8**".
- Loosen screws **1**, **2**, **3**, and **4** as well as screw **5** on both sides of the post.
- Select parameter **605**.
- Unscrew the needle plate.
- Turn the handwheel four times in the direction of rotation.
- Bring the handwheel into position **202°** (= needle bar position **2.0mm** after b.d.c.)
- Set the hook point on the middle of the needle. Take care that the needle is not squeezed by needle guard **6**.
- Adjust the needle height according to requirement **2**, cf. chapter **1.05.05** Preliminary Adjustment of Needle Height.
- Move hook post according to requirement **1** and tighten screws **4**.

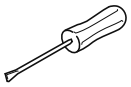

- Tighten screws 2 allowing for bevel gear wheel movement.
- Move collar 7 up against bevel gear wheel 8 and tighten screws 1.
- Screws 5 remain loosened for further adjustments.
- Adjust needle guard 6 (screw 9) according to requirement 3.

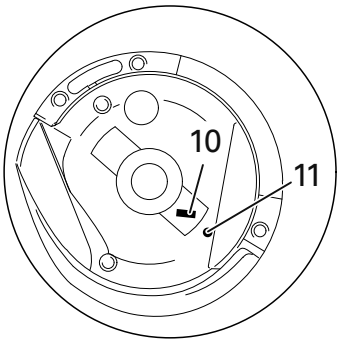

When changing a clamp take care that the markings 10 and 11 are on one side.

1.05.10 Needle position crosswise to sewing direction (on the PFAFF 2571 ME)

Requirement
As seen crosswise to the sewing direction, the needle must penetrate in the centre of the needle hole.

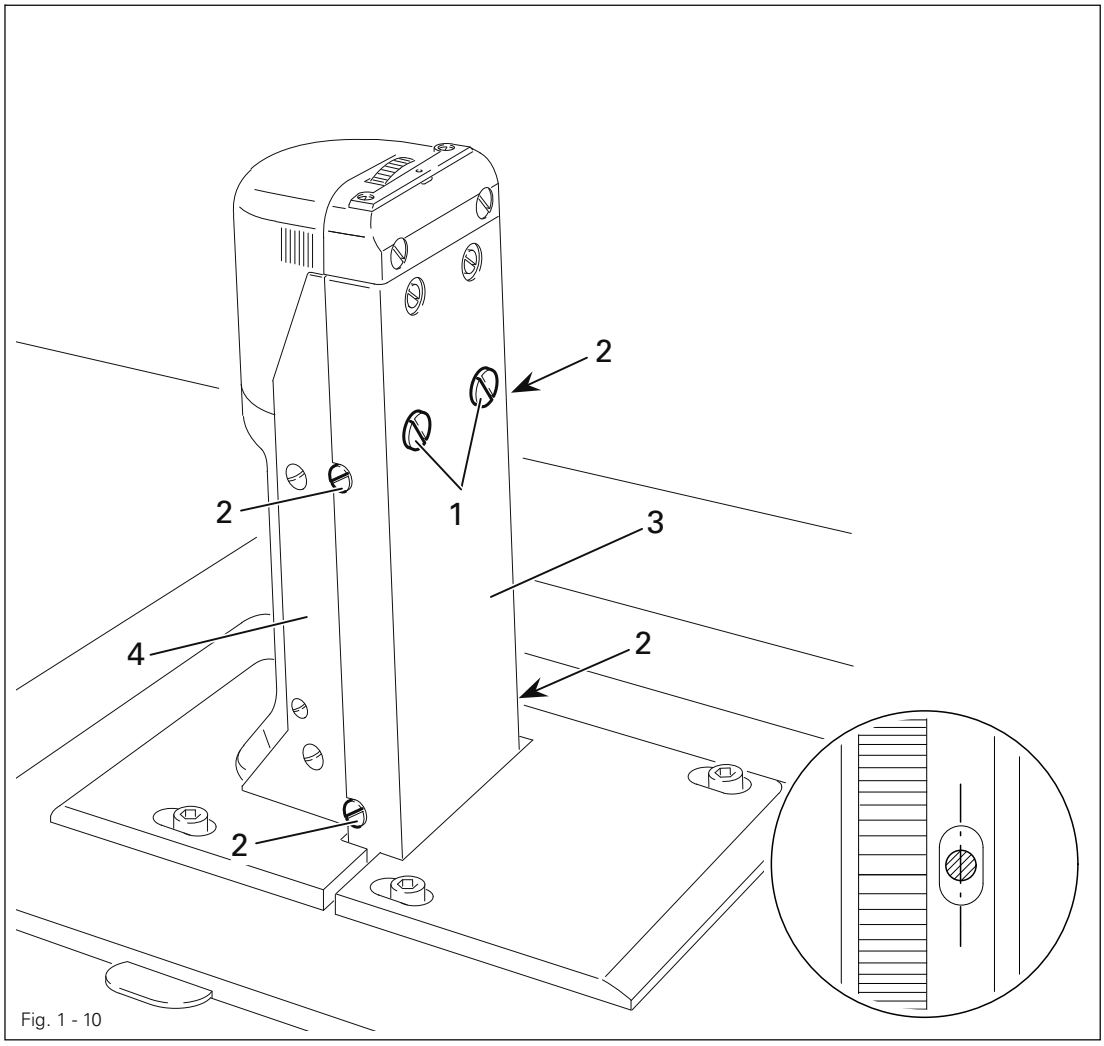

Fig. 1 - 10

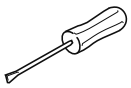

- Turn screws **1** (screws **2**, on both sides of the post) according to the **requirement**. Ensure that support plate **3** is parallel to hook post **4**.

1.05.11 Needle position crosswise to sewing direction (on the PFAFF 2574)

Requirement
As seen crosswise to the sewing direction, the needles must penetrate in the centre of the needle holes.

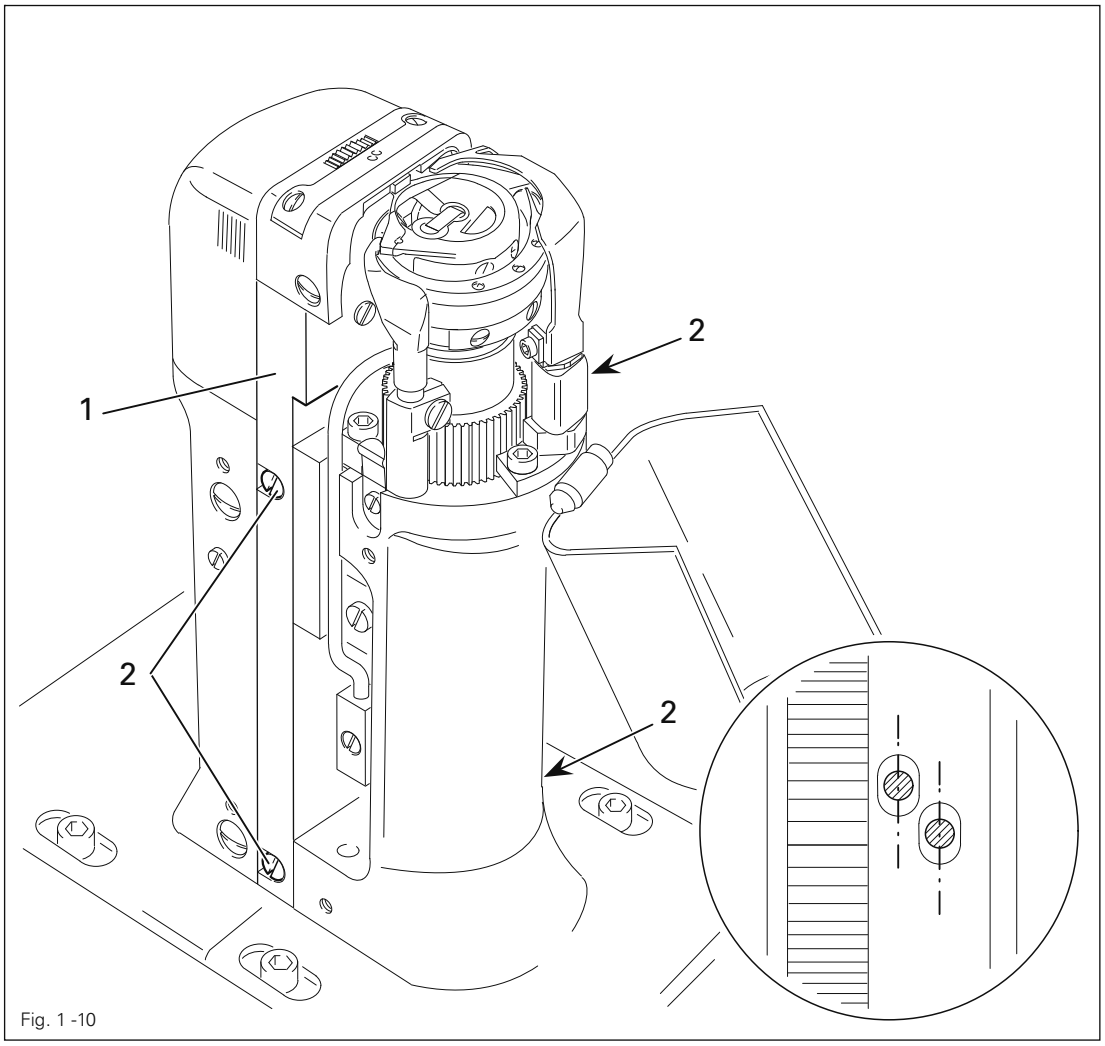

Fig. 1 -10

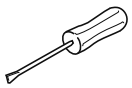

- Shift bearing plate **1** (screws **2**, on both sides of the post) according to the **requirement**.

1.05.12 Needle position crosswise to sewing direction (on the PFAFF 2591 ME)

Requirement
As seen crosswise to the sewing direction, the needle must penetrate in the centre of the needle hole.

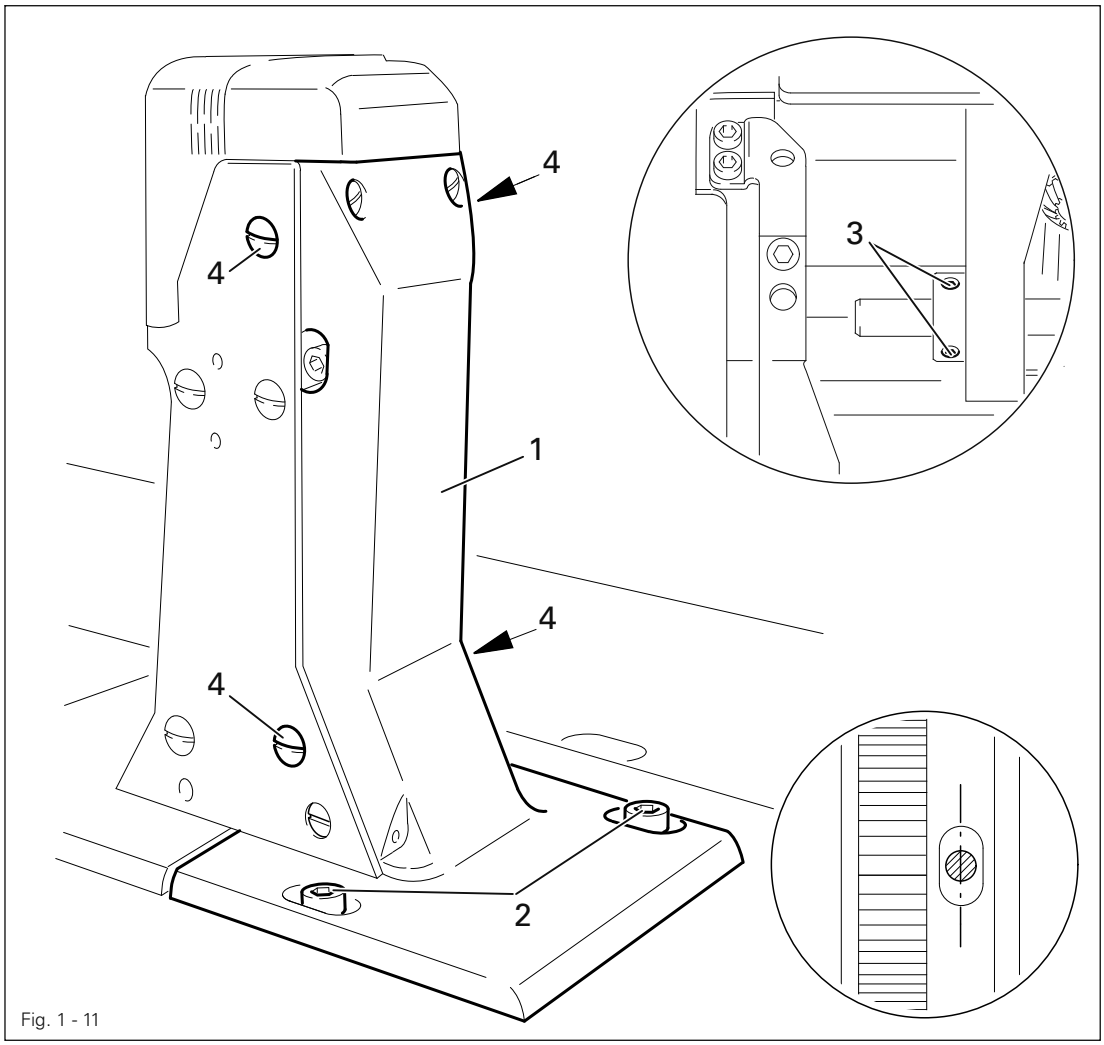

Fig. 1 - 11

- Adjust feed wheel post **1** (screws **2**, **3** and **4**) according to the **requirement**.

1.05.13 Height and stroke of the bobbin case opener

Requirement

1. The top edges of the bobbin case opener **1** and bobbin case base **3** should be on one level.
2. When the bobbin case opener **1** has deflected the bobbin case to its furthest point, the catch of the bobbin case should be **0.3 - 0.5 mm** from the back edge of the needle plate recess.

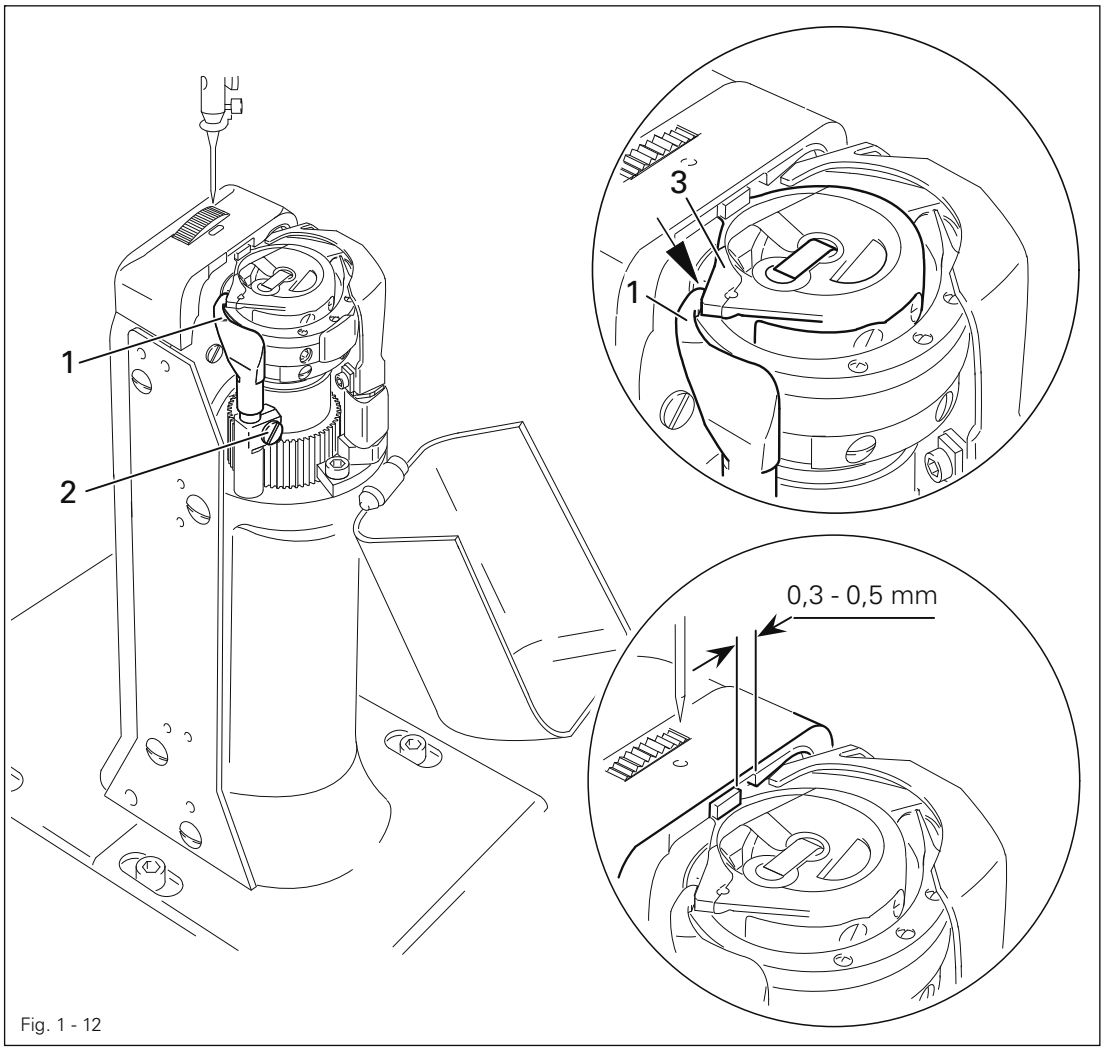

Fig. 1 - 12

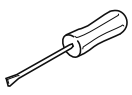

- Adjust bobbin case opener **1** (screw **2**) in accordance with **requirement 1**.
- Turn the balance wheel until the bobbin case opener has deflected the bobbin case to its furthest point.
- Adjust bobbin case opener **1** (screw **2**) in accordance with **requirement 2**.

1.05.14 Height of the feed wheel (on the 2571 ME)

Requirement

1. When pressure is applied to the feed wheel **4**, it should protrude from the needle plate by tooth height (approx. **0.8** mm)
2. When no pressure is applied to the feed wheel **4** , it should have a vertical play of approx. **0.3** mm.

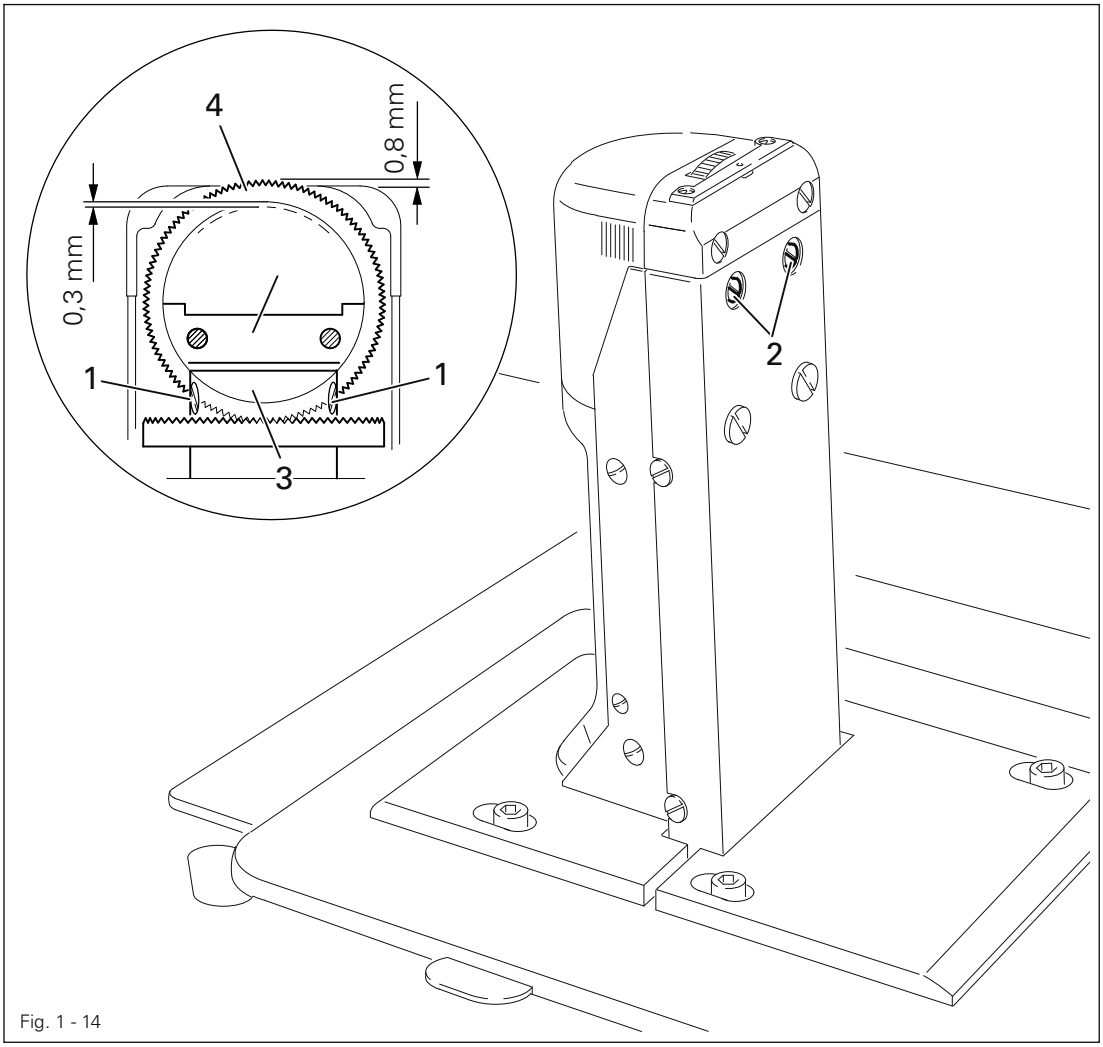

Fig. 1 - 14

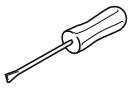

- Swing out the roller presser.
- Loosen screws **1** and **2**.
- Adjust drive wheel **3** according to **requirement 1**, taking care to see that the teeth of drive wheel **3** and feed wheel **4** lock into each other properly.
  (Machines of model A have no interlocking).
- Tighten screws **1**.
- Adjust guide **5** according to **requirement 2** and tighten screws **2**.

1.05.15 Height of the feed wheel (on the 2574)

Requirement

1. When pressure is applied to the feed wheel **4**, it should protrude from the needle plate by tooth height (approx. **0.8** mm)
2. When no pressure is applied to the feed wheel **4** , it should have a vertical play of approx. **0.3** mm.

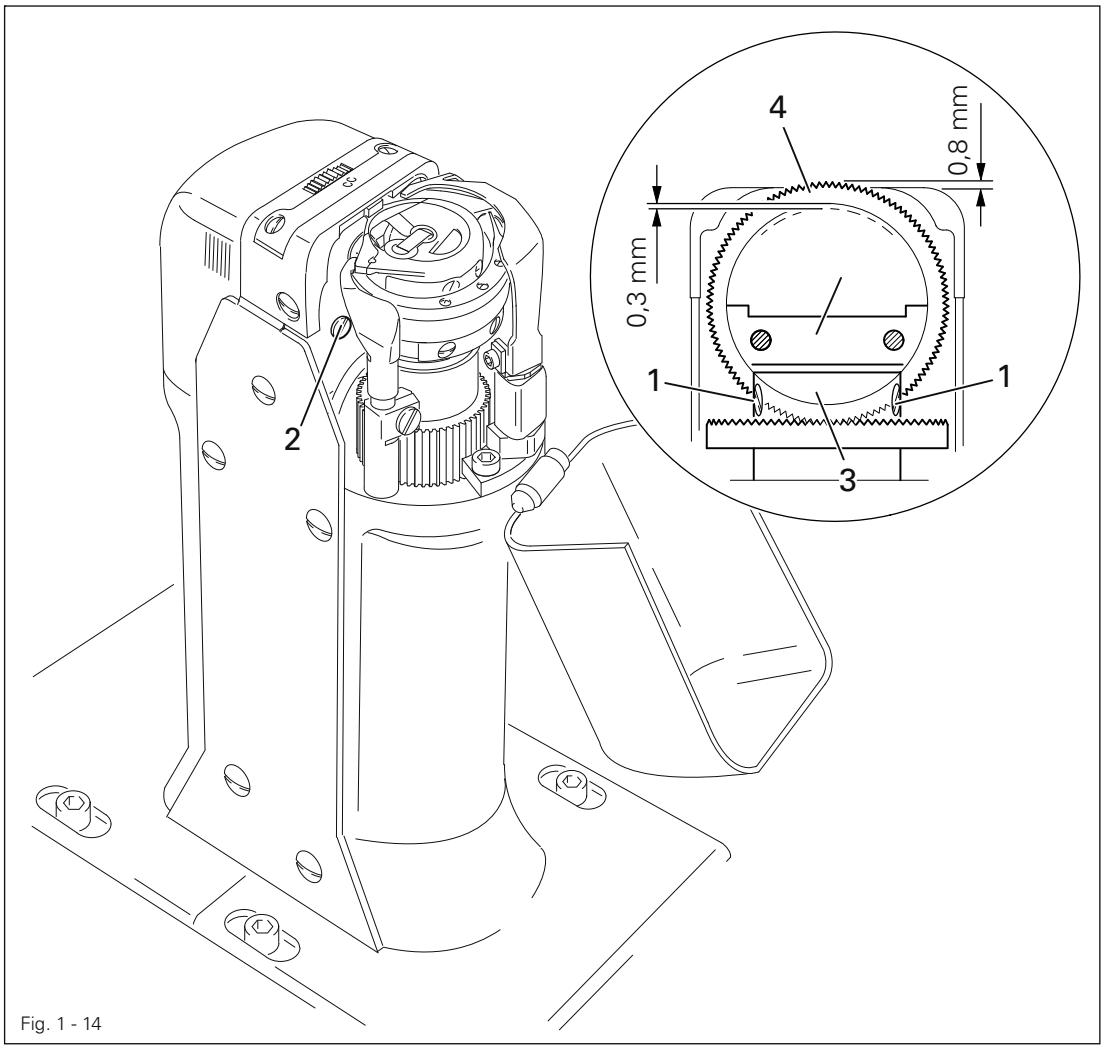

Fig. 1 - 14

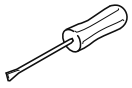

- Swing out the roller presser.
- Loosen screws **1** and **2** (two screws each).
- Adjust drive wheel **3** according to **requirement 1**, taking care to see that the teeth of drive wheel **3** and feed wheel **4** lock into each other properly.
- Tighten screws **1**.
- Adjust guide **5** according to **requirement 2** and tighten screws **2**.

1.05.16 Height of the feed wheel (on the 2591)

Requirement
The feed wheel should protrude from the needle plate by tooth height (approx. **0.8 mm**)

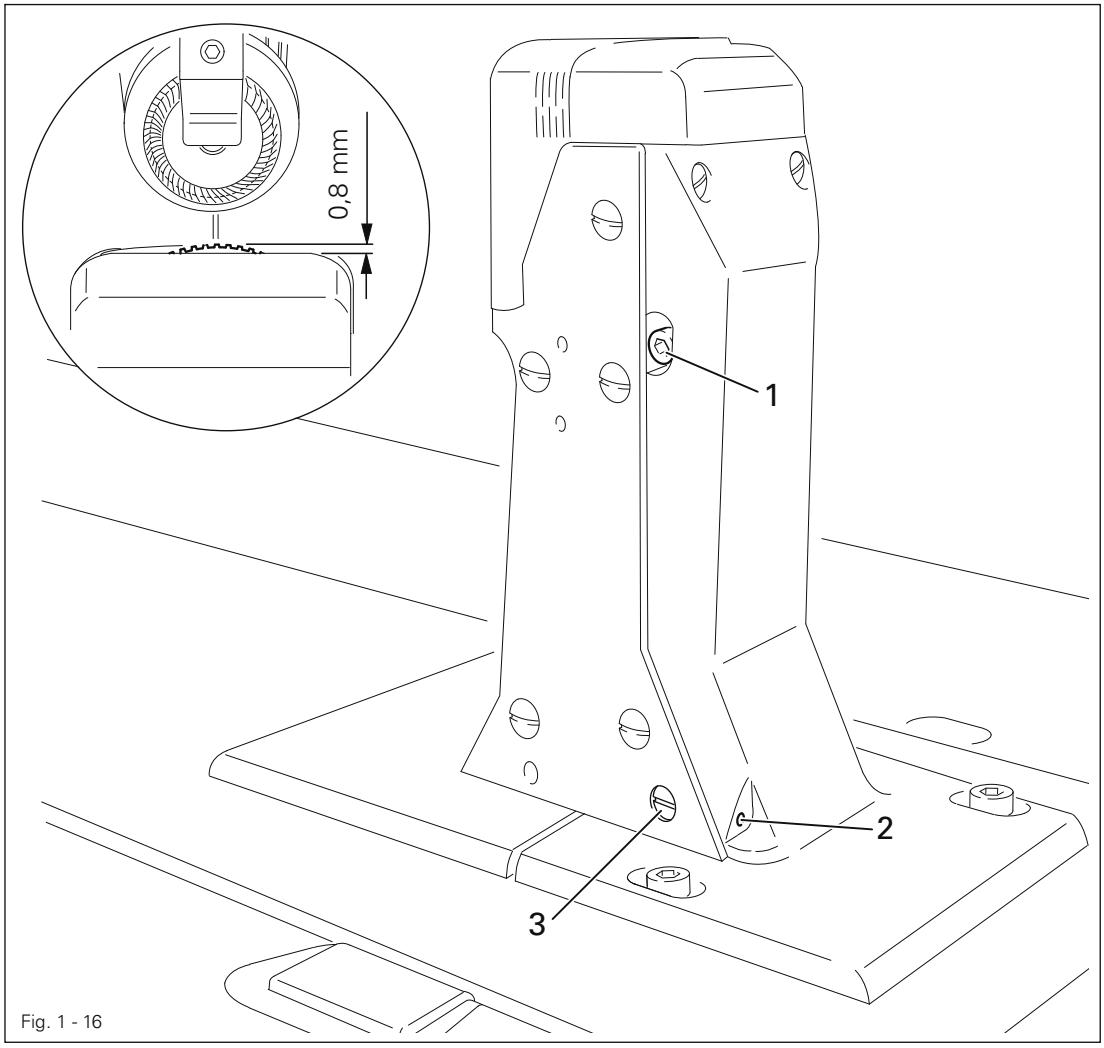

Fig. 1 - 16

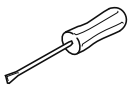

- Swing out the roller presser.
- Loosen screws **1**.
- Adjust eccentric **3** (fastening screw accessible through hole **2**) according to the **requirement**.

1.05.17 Roller-presser

Requirement

When the roller-presser **1** is resting on the feed wheel **6** it must

1. be parallel to the feed wheel **6** when viewed in the direction of sewing,
2. be in the middle of the (needle when viewed in the direction of sewing and
3. be as close as possible to the needle when viewed in transverse direction of sewing.

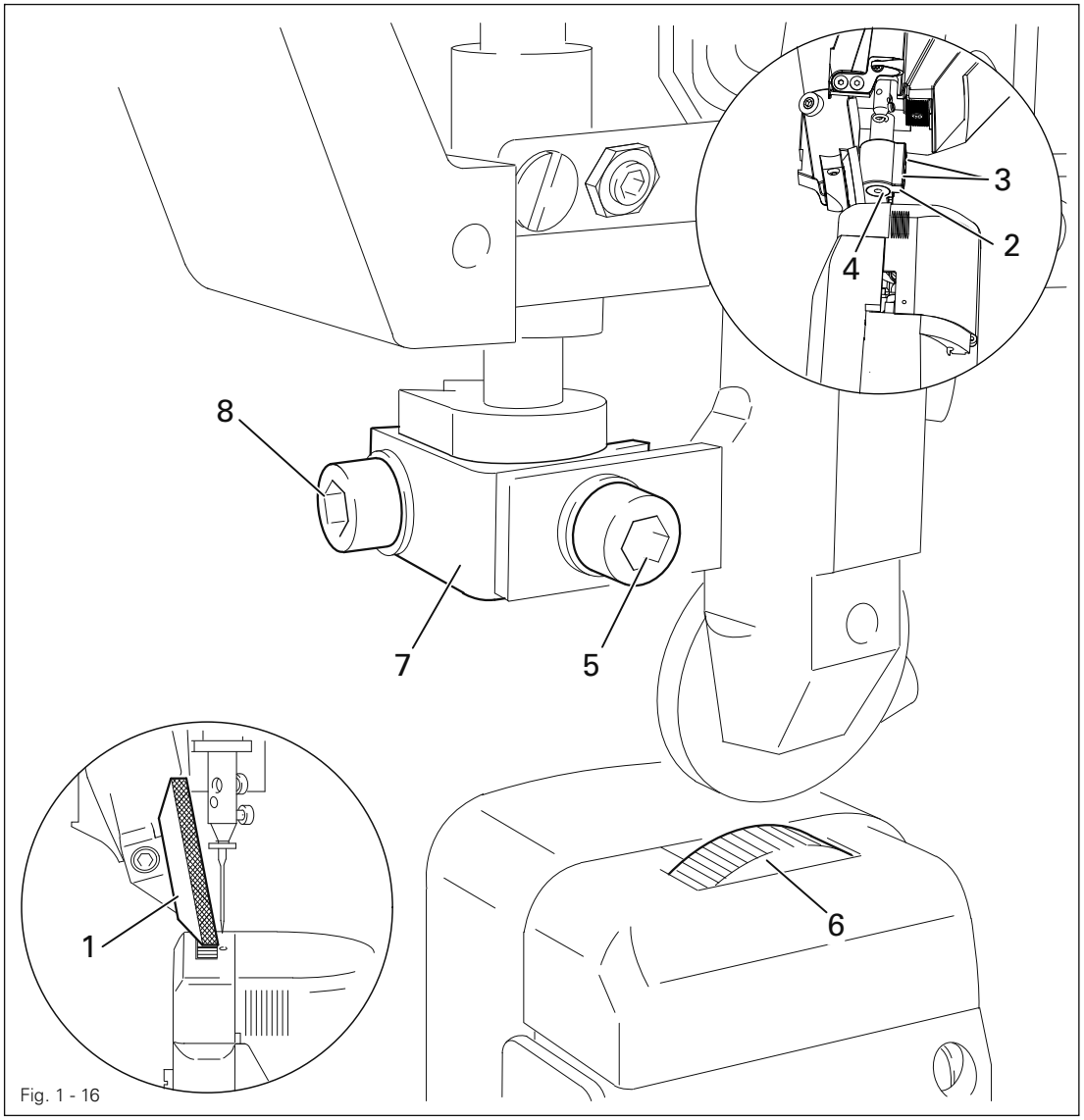

Fig. 1 - 16

- Raise the roller-presser **1**.
- Place roller-presser bracket **2** (screws **3**) flush to the bottom edge of presser bar **4**.
- Always observe **requirement 1** when carrying out the following adjustments.
- Move the roller-presser **1** (screw **5**) in accordance with **requirement 2**.
- Allow the roller-presser **1** to come to rest on the feed wheel **6**.
- Move bracket **7** (screw **8**) according to requirement **3**.

When sewing very tight curves the roller-presser **1** should be moved toward the operator slightly.

1.05.18 Clearance between roller presser and feed wheel

Requirement

1. With a resting roller-presser there should be a gap between the lift piece **1** and the housing of about **3mm**.
2. With a raised roller-presser the distance between roller-presser and feed wheel should be **8mm**.

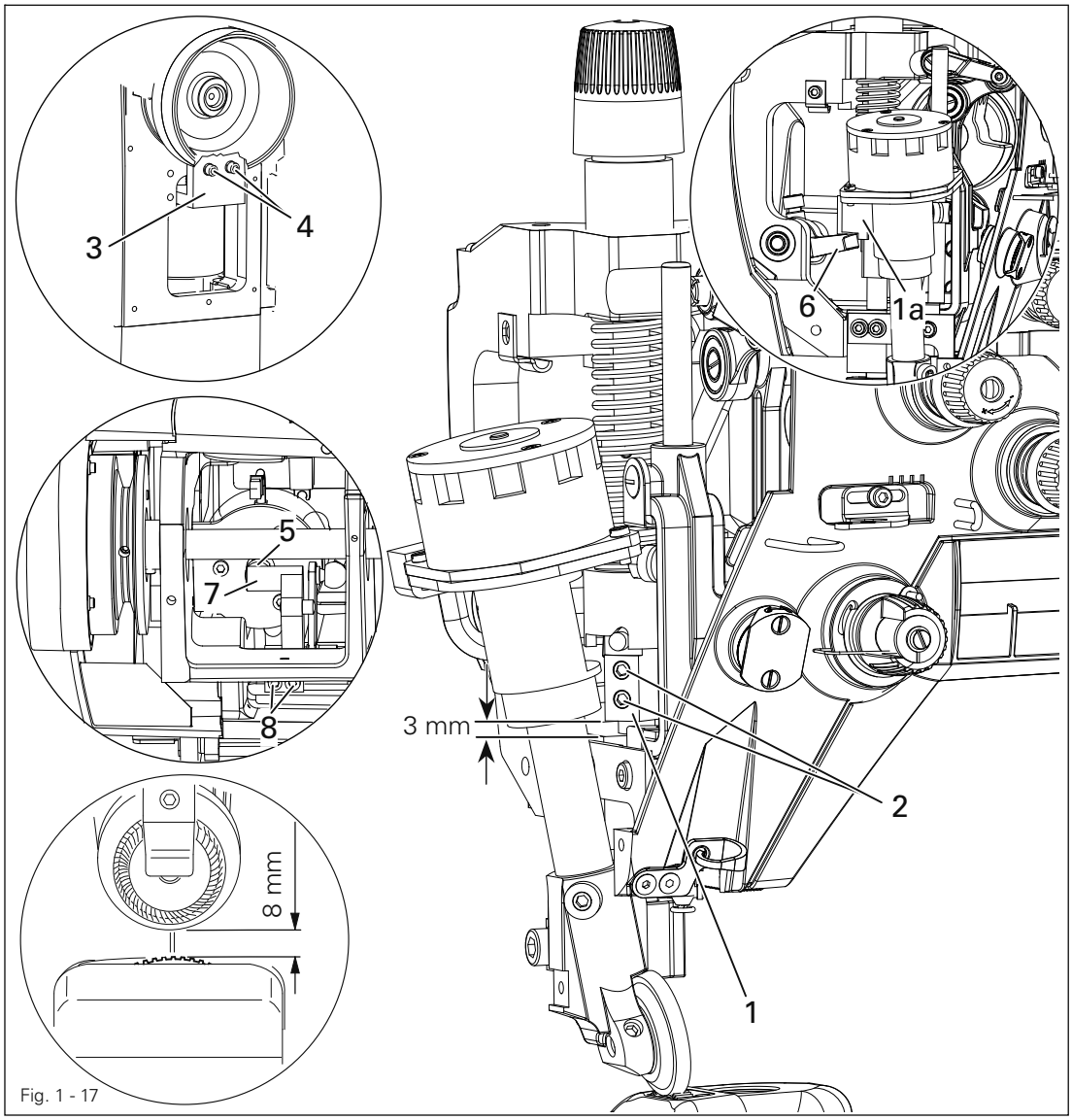

Fig. 1 - 17

- Set the roller-presser down on the needle plate.
- Decrease roller-presser pressure.
- Adjust lift piece **1** (screws **2**) according to the requirement **1**.
- Push magnet bracket **3** (screws **4**) downwards as far as it will go.
- Raise the roller-presser and place an **8mm** gauge under the roller-presser.
- With magnet plunger **5** extended, move lever **6** up against lift piece **1**a and mount lever **7** (screws **8**) on to magnet plunger **5**.
- Check according to the requirement.

1.05.19 Knee lever

Requirement

1. When the knee lever is pressed the roller-presser should raise up **7mm**
2. Before the roller-presser raises up, the knee lever should have a little bit of clearance.

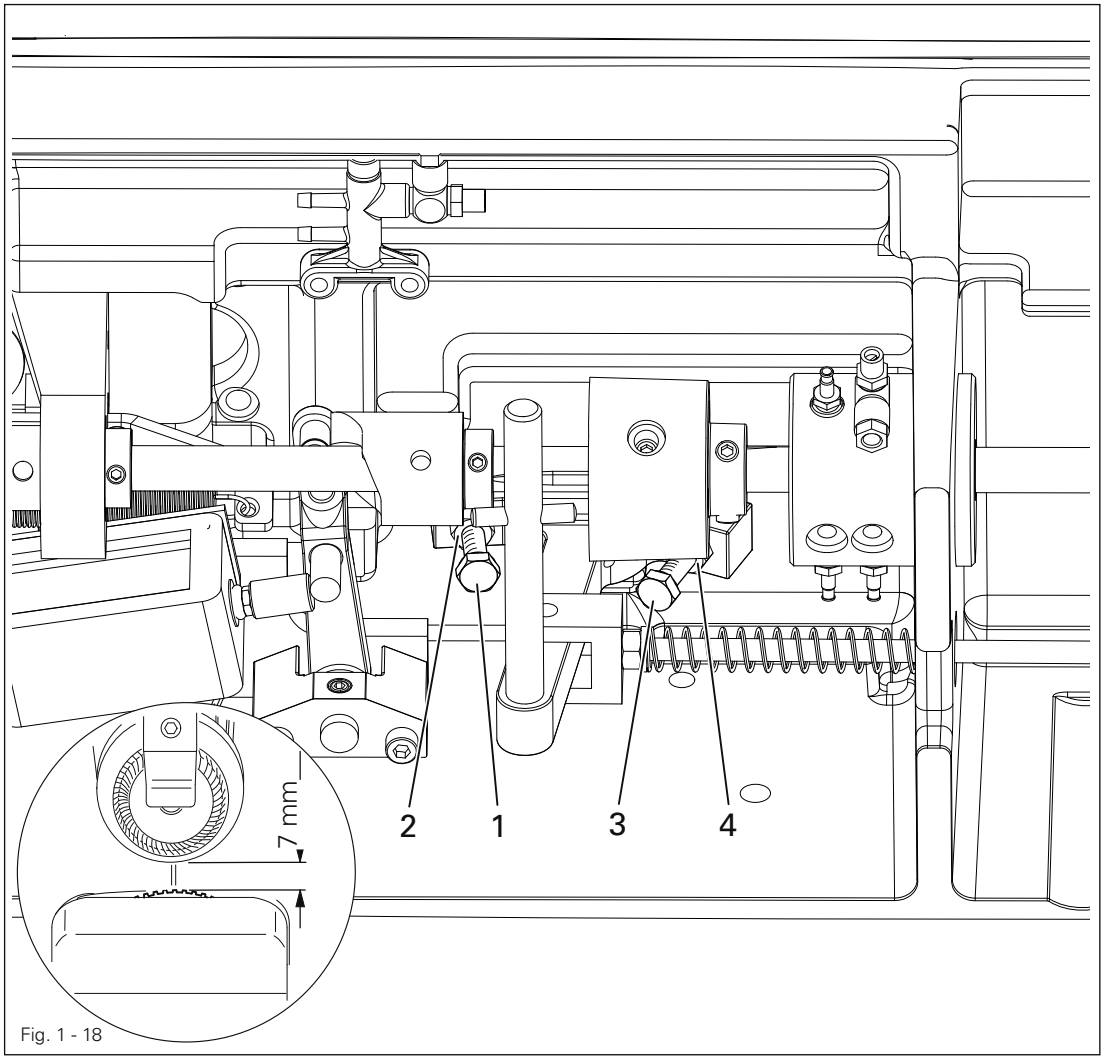

Fig. 1 - 18

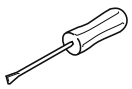

- Turn screw **1** (nut **2**) according to **requirement 1** .
- Turn screw **3** (nut **4**) according to **requirement 2**.

1.05.20 Tension release

Requirement
With the roller-presser raised the tension shims **3** should be about **0.5mm** loosened from each other.

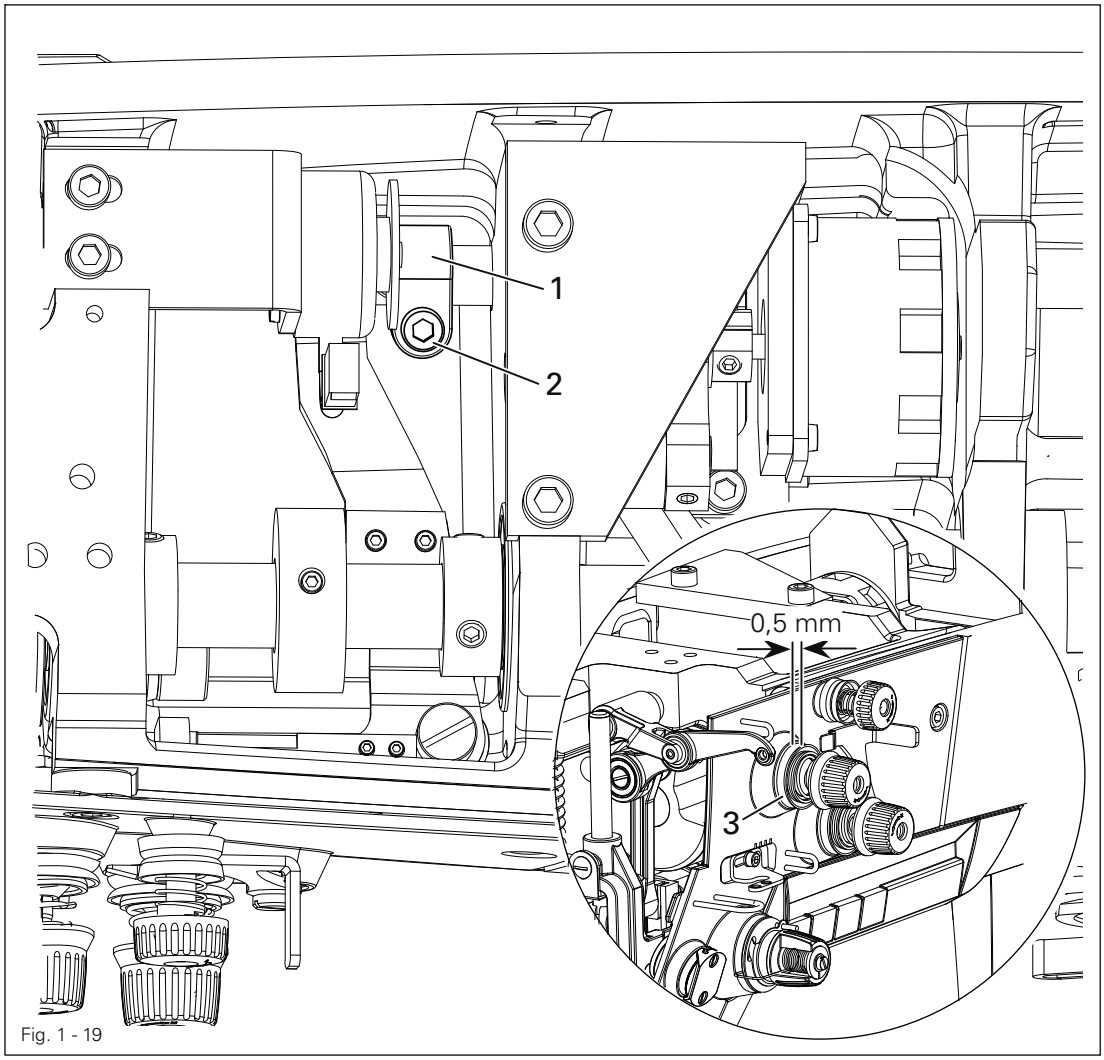

Fig. 1 - 19

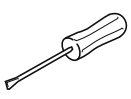

- Raise roller-presser and calibrate lever **1** (screw **2**) according to the requirement.

1.05.21 Thread check spring and thread regulator

Requirement

1. The movement of thread regulator **3** must be completed when the needle point enters the material.
2. When the thread loop is at its largest while being passed around the hook, the check thread spring **3** should rise slightly from the rest **1**.

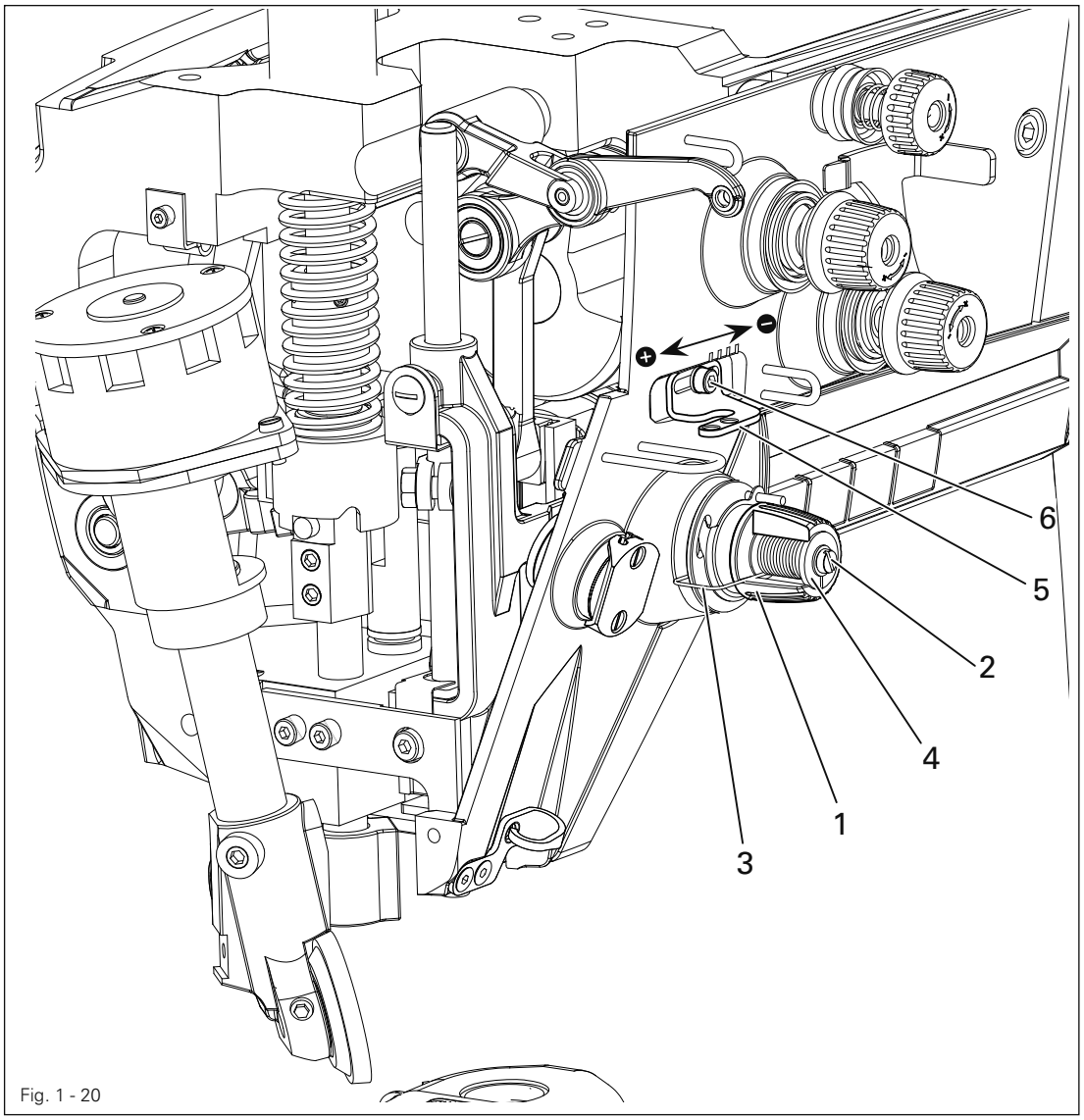

Fig. 1 - 20

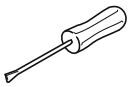

- Position rest **1** (screw **2**) in accordance with **requirement 1**.
- Turn sleeve **4** (screw **2**) to adjust the tension of thread check spring **3**.
- Position thread regulator **5** (screw **6**) in accordance with **requirement 2**.

For technical reasons it may be necessary to deviate from the indicated spring stroke or spring tension.
Move thread regulator **5** (screw **6**) towards ("+") (= more thread) or ("-") (= less thread).

1.05.22 Bobbin winder

Requirement

1. When the bobbin winder is engaged, the winding spindle must be driven reliably. When it is disengaged, friction wheel **3** should not be touching drive wheel **1**.
2. When it is switched off, the bobbin winder must click securely into its end position (knife raised).

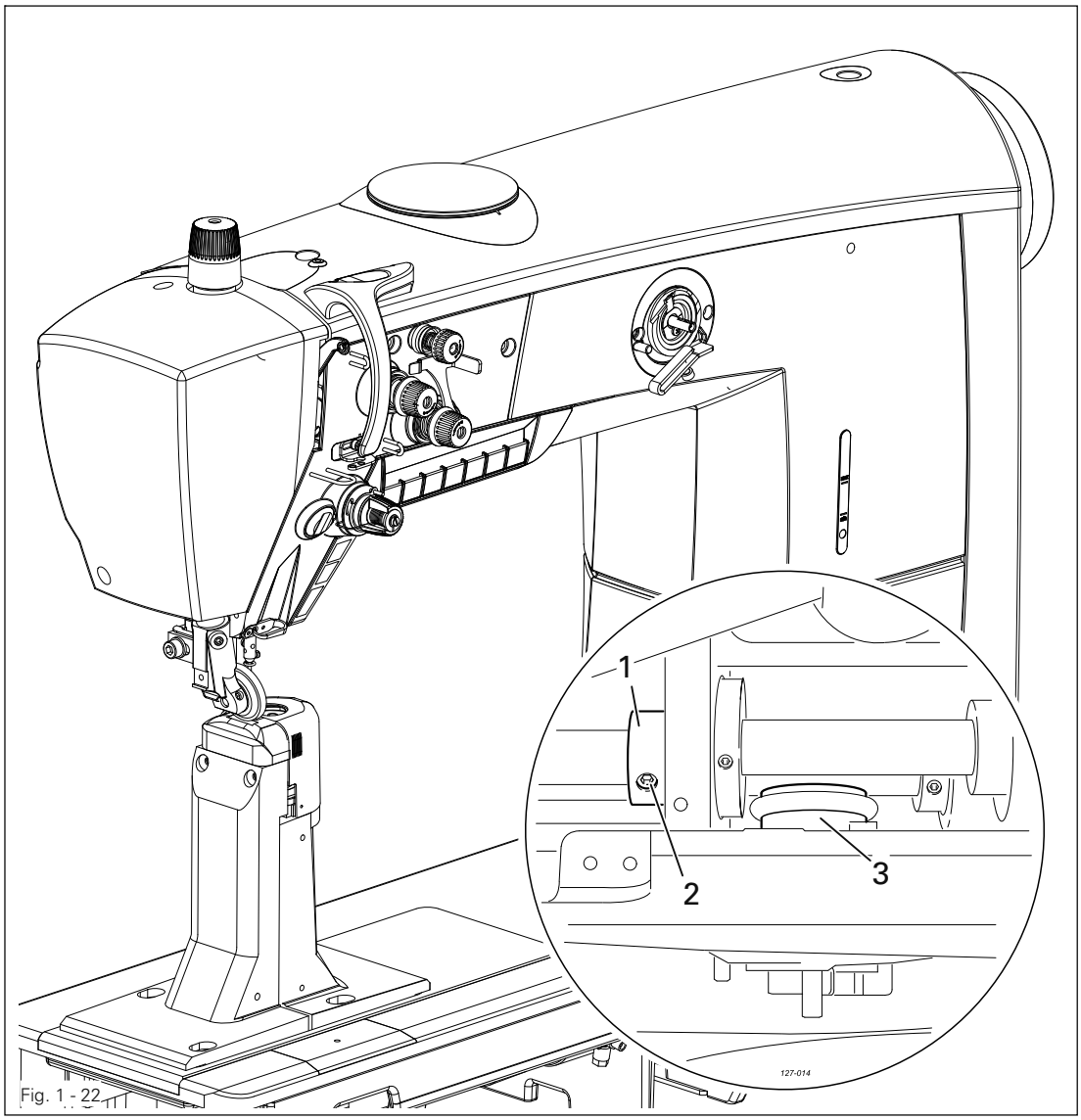

Fig. 1 - 22

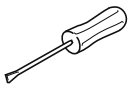

- Adjust drive wheel **1** (screw **2**) in accordance with the **requirement**.

1.05.23 Sewing foot pressure

Requirement

1. The material must be fed smoothly.
2. No pressure marks should be visible on the material.

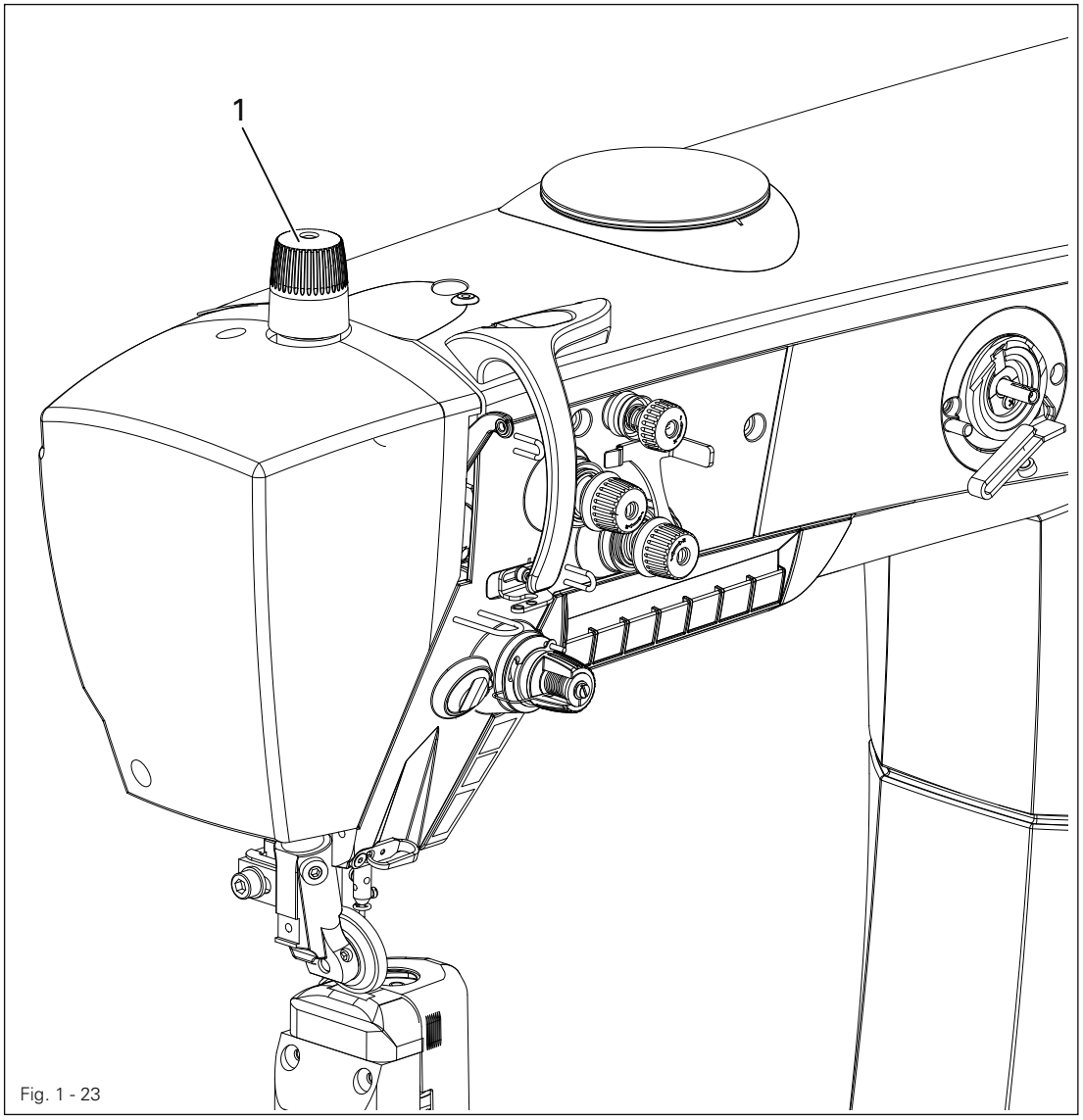

Fig. 1 - 23

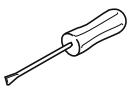

- Turn adjustment screw **1** in accordance with the **requirement**.

1.05.24 Lubrication

Requirement
After a running time of 10 seconds a fine line of oil should form on a strip of paper held next to the hook.

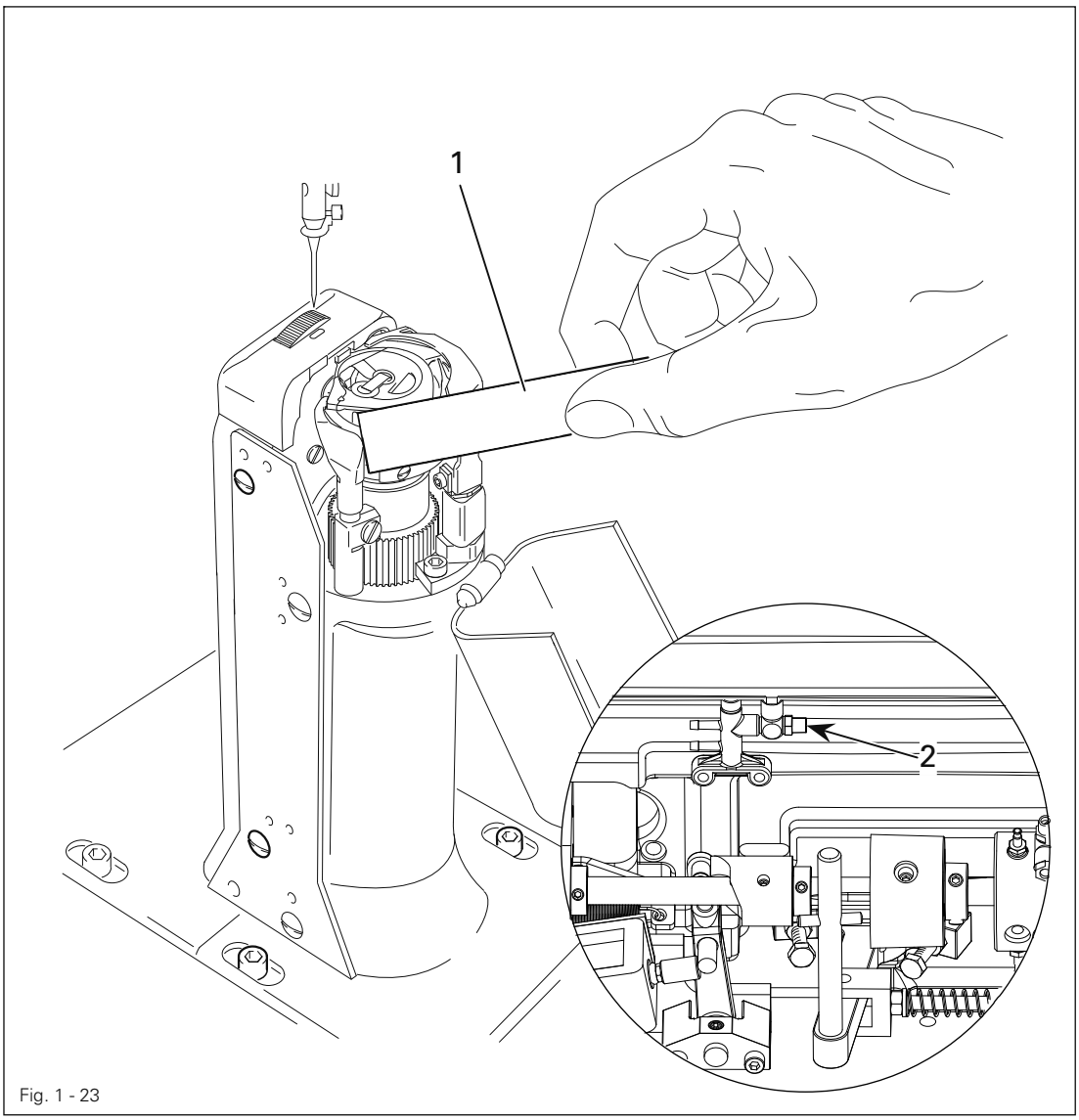

Fig. 1 - 23

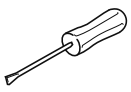

- Check whether oil has been filled in and that there is no air in the oil lines.
- Let the machine run for 2-3 min.

While the machine is running do not place hands in the needle or hook area!
Danger of injury from moving parts!

- With the machine running hold a strip of paper 1 on the hook and check the **requirement**.
- If necessary, adjust the oil flow on screw 2.

1.05.25 Re-engaging the slip-clutch

Clutch **1** is adjusted at the works. In the case of a thread jamming, clutch **1** will disengage, in order to avoid damage to the hooks.
The following describes how to re-engage clutch **1**.

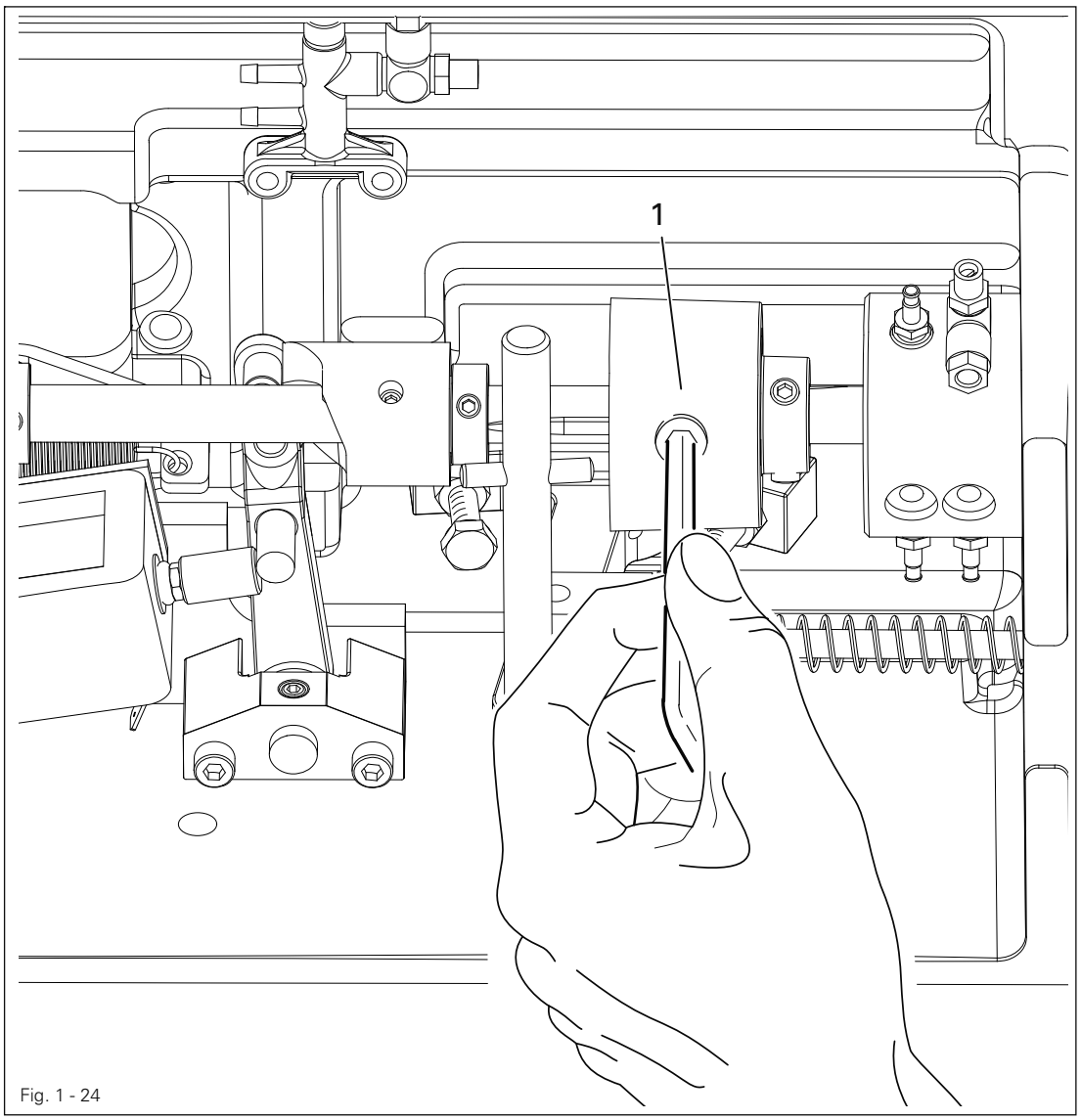

Fig. 1 - 24

- Remedy jammed thread fault.
- Hold clutch **1** firmly, as shown in Fig. **1 - 19**, and turn the balance wheel until clutch **1** re-engages.

1.06 Adjusting the edge trimmer -725/04

1.06.01 Position of the knife holder on model 2571

Requirement
When the thread trimmer is engaged and the adjusting wheel has been turned to its highest position
1. the knife holder **2** must be parallel to the post and
2. the top edge of the needle plate must be in the centre of the angular knife opening.

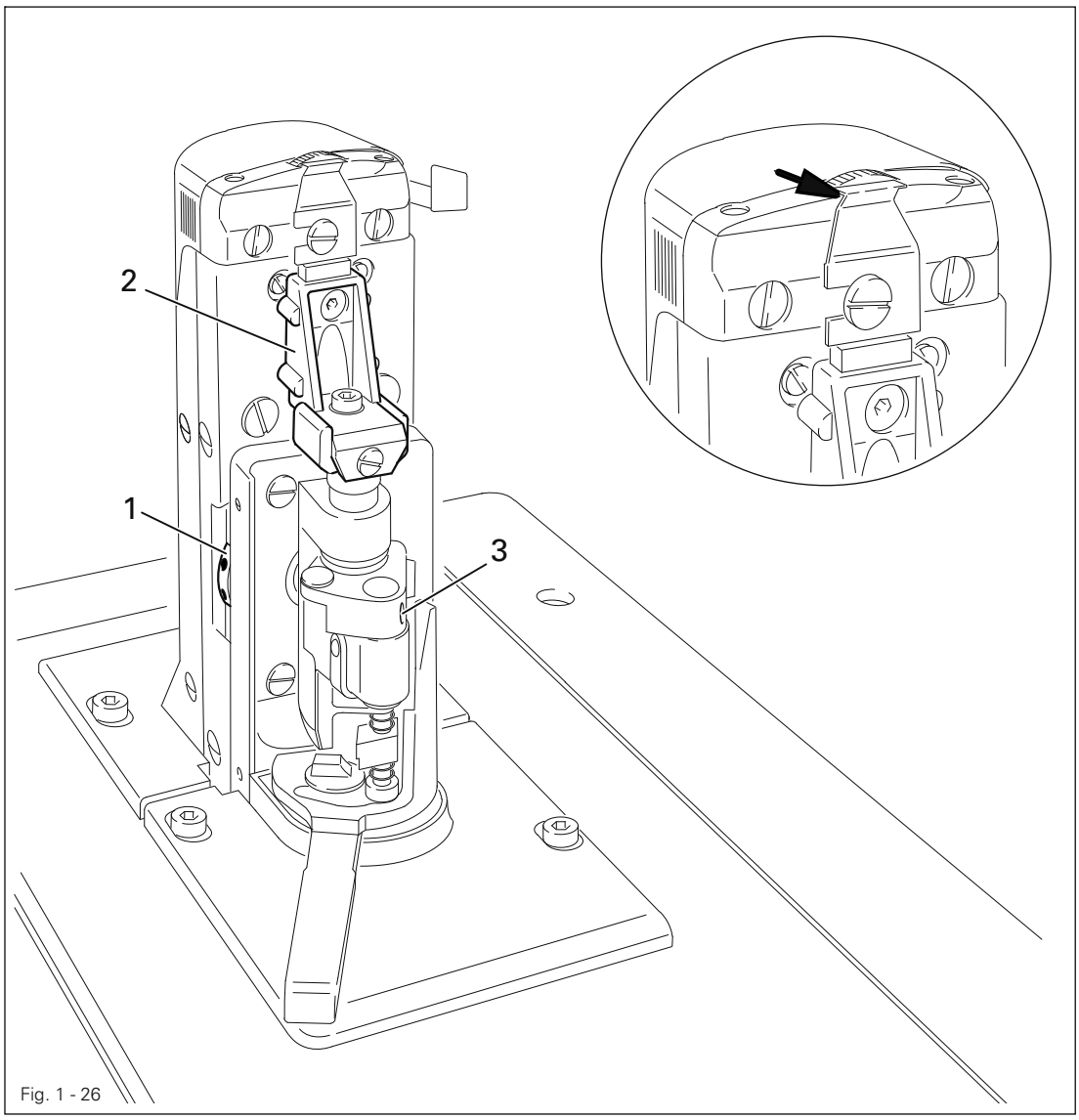

Fig. 1 - 26

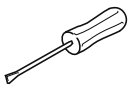

- Turn the adjusting wheel **1** to its highest position and engage edge trimmer.
- Adjust knife holder **2** (screw **3**) according to the requirements.

1.06.02 Position of the knife holder on model 2591

Requirement
When the thread trimmer is engaged, the centre of the angular knife opening must be level with the top edge of the needle plate.

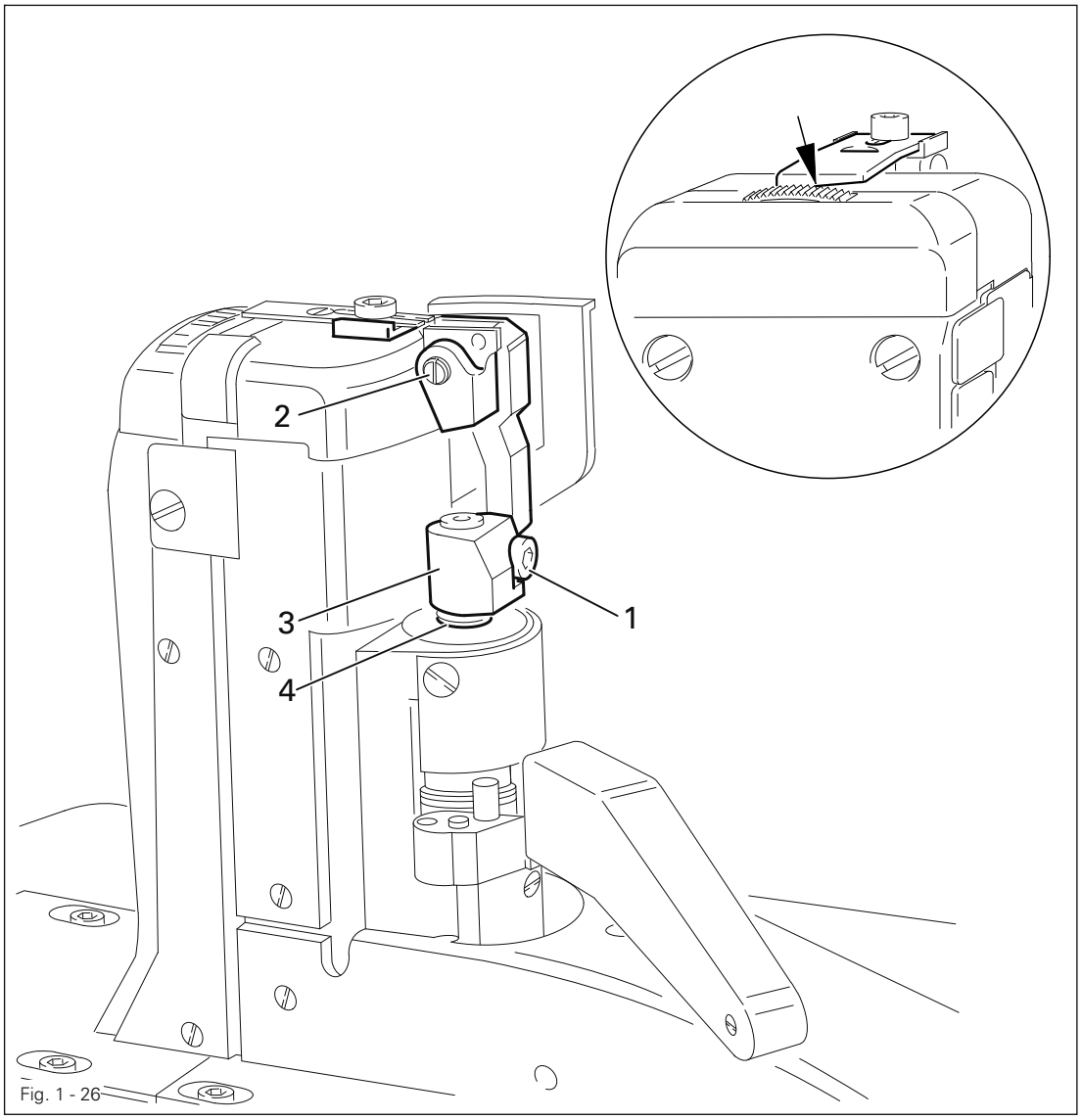

Fig. 1 - 26

- Switch off the machine and engage the edge trimmer.
- Loosen screw **1**.
- By turning sccentric **2**, position the knife in the centre of its adjustment range.
- Adjust knife holder **3** according to the requirement and tighten screw **1**.
- Position locking ring **4** on the knife holder **3**.

Depending on the material thickness, changes in the basic setting of eccentric **2** are possible.

1.06.03 Knife stroke on model 2571 ME

Requirement
The knife stroke can be adjusted over a range from **1.0** to **3.5** mm, allowing the best possible adaption to all materials used.

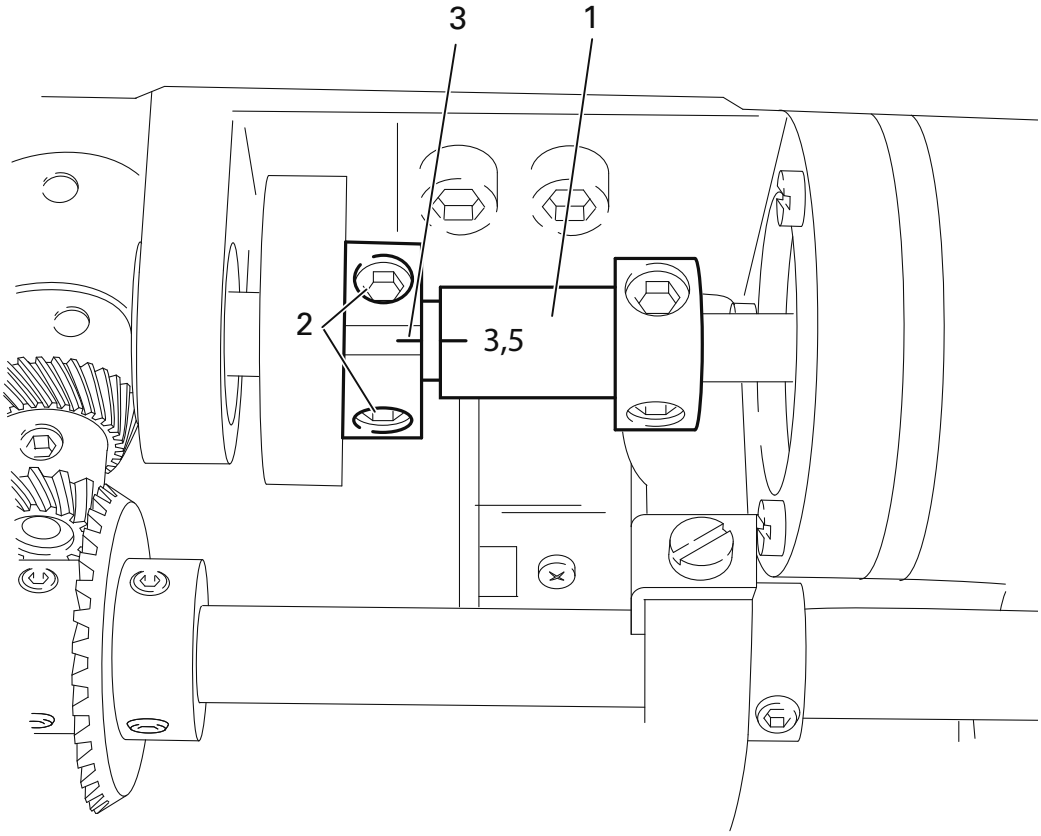

Fig. 1 - 28

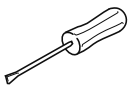

- Turn eccentric **1** (screws **2**) so that the marking of the desired cutting stroke is opposite the marking on clamp collar **3**.

1.06.04 Knife stroke on model 2591 ME

Requirement
The knife stroke can be adjusted over a range from **2.0** to **3.5** mm, allowing the best possible adaption to all materials used.

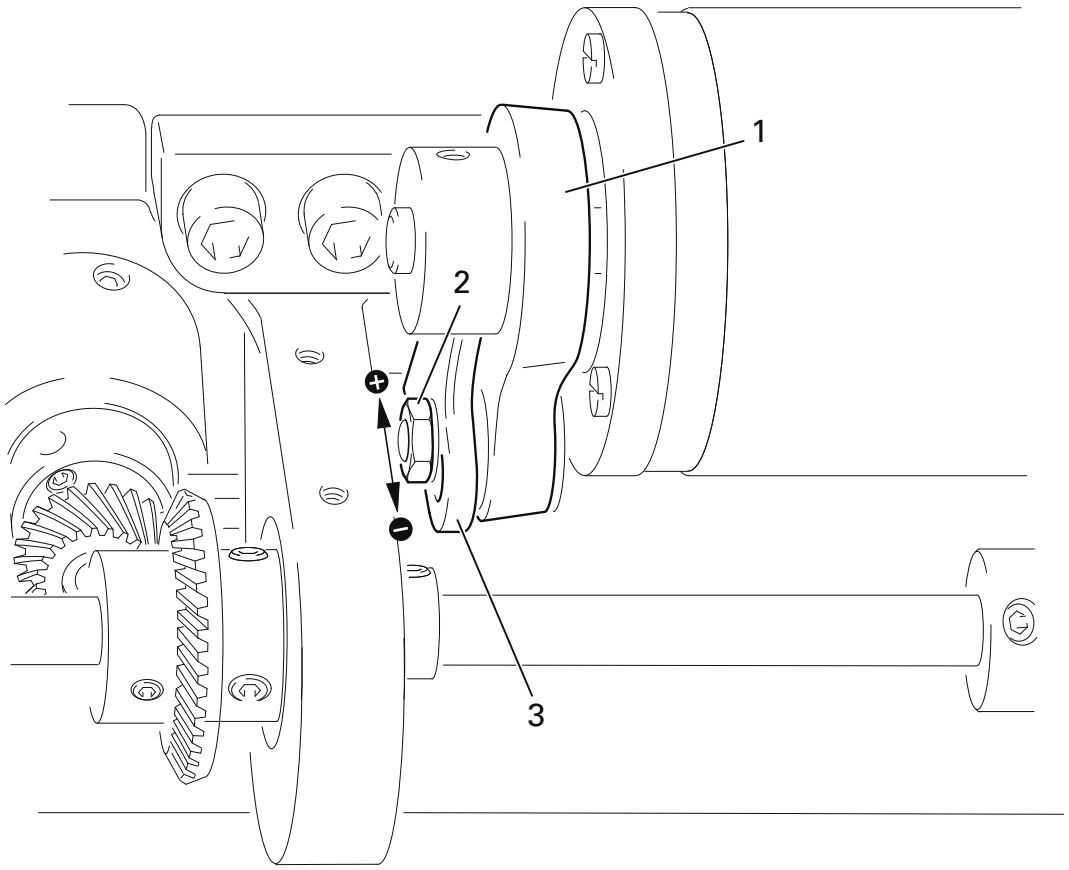

Fig. 1 - 29

- Adjust crank **1** (nut **2**) in slotted lever **3** according to the requirement.

1.06.05 Cutting stroke on model 2571 ME

Requirement
When the edge trimmer is engaged and the needle is in the needle hole, the stroke of knife **1** should be half in front of and half behind the needle, when the motor shaft is turned by hand.

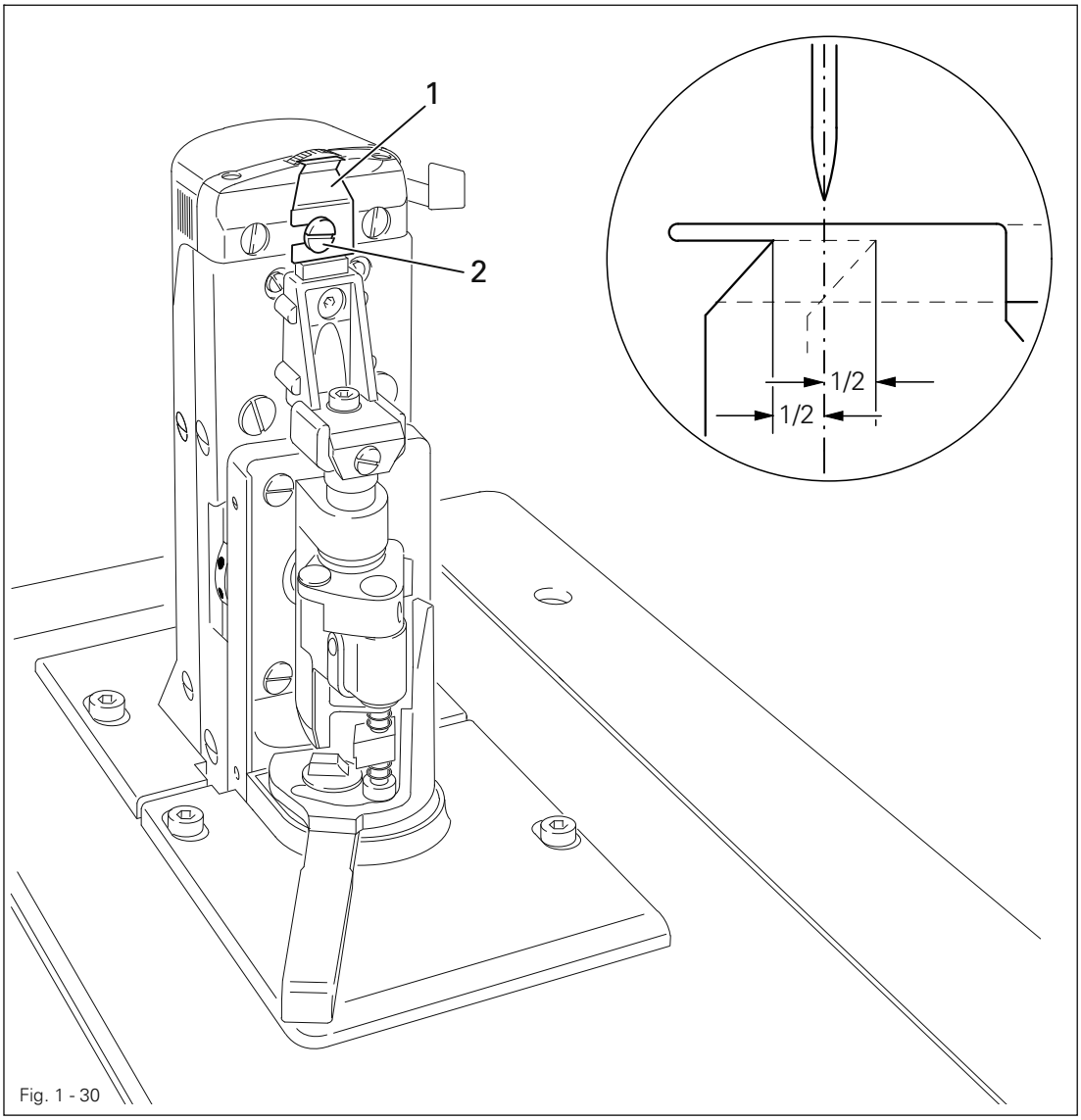

Fig. 1 - 30

- Switch off the machine and engage the edge trimmer.
- Adjust knife **1** (screw **2**) according to the **requirement**.

1.06.06 Cutting stroke on model 2591 ME

Requirement
When the edge trimmer is engaged and the needle is in the needle hole, the stroke of knife **3** should be half in front of and half behind the needle, when the motor shaft is turned by hand.

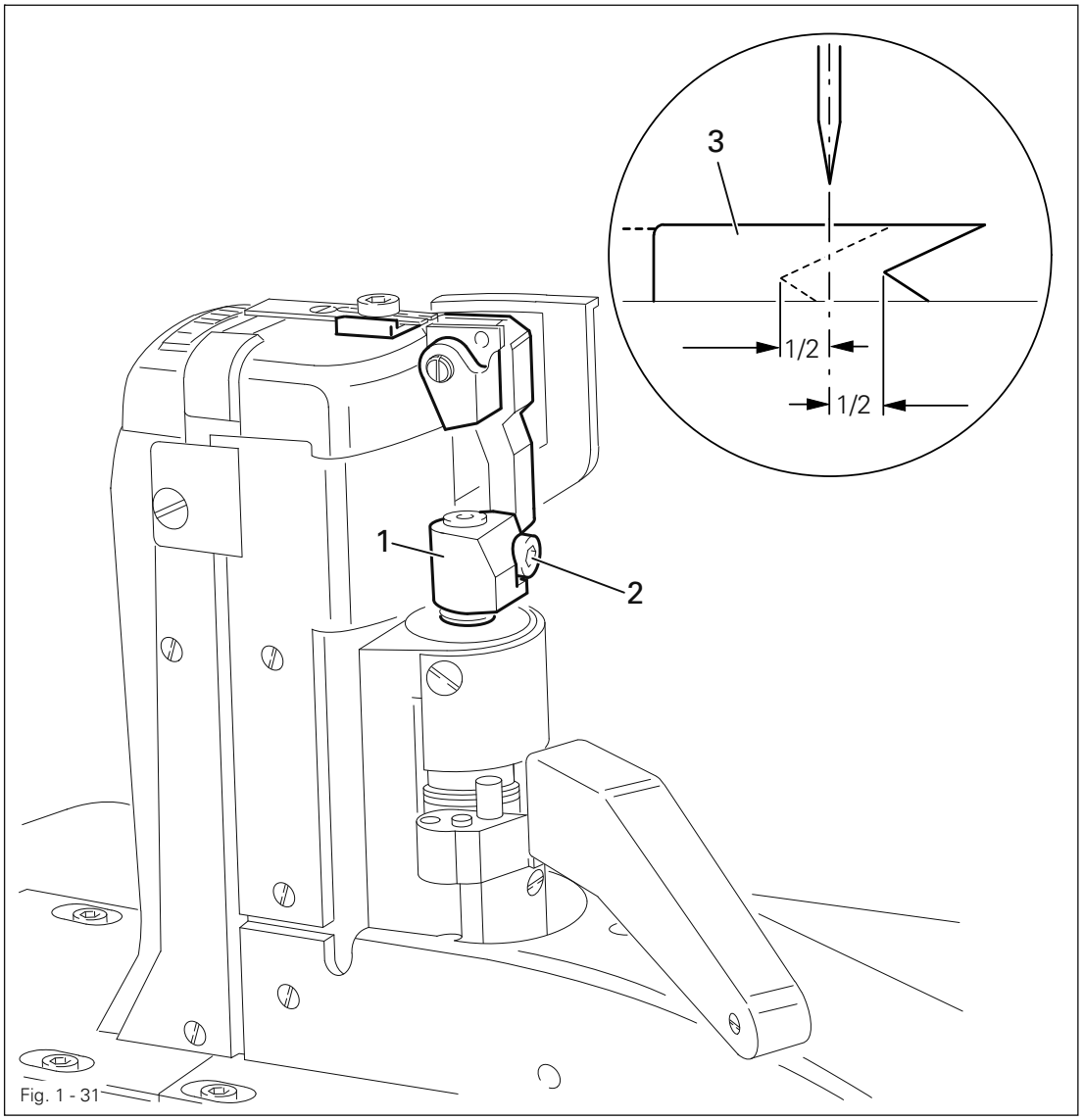

Fig. 1 - 31

- Switch off the machine and engage the edge trimmer.
- Adjust knife holder **1** (screw **2**) according to the **requirement**.

1.06.07 Knife position

Requirement
When the edge trimmer is engaged, the knife should rest lightly on the needle plate insert, but no whistling sound should occur during trimming.

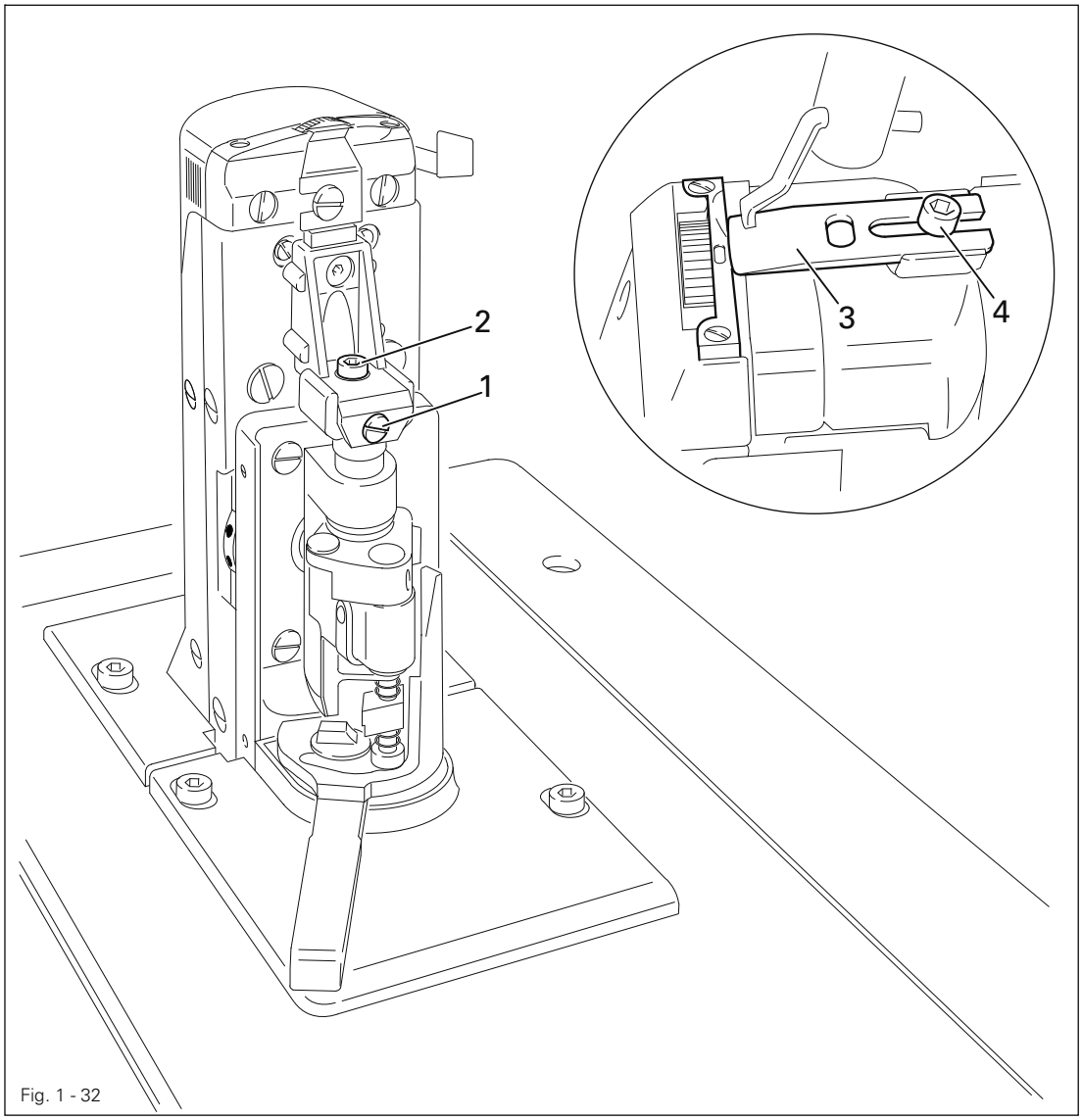

Fig. 1 - 32

PFAFF 2571 ME

- Adjust screw **1** (screw **2**) according to the requirements.
- Carry out a cutting test and repeat adjustment if necessary.

PFAFF 2591 ME

- Adjust knife **3** (screw **4**) according to the requirements.
- Carry out a cutting test and repeat adjustment if necessary.

1.07 Adjusting the thread trimmer -900/81

1.07.01 Resting position of the roller lever / radial position of the control cam

Requirement

1. When the thread trimmer attachment is at rest lever **7** should fit closely to plunger **5** and the roller on roller lever **4** should be **0.3mm** away from control cam **1**.
2. When thread lever at t.d.c. (handwheel position **53°**) the control cam **1** should have just bought roller lever **4** to rest.

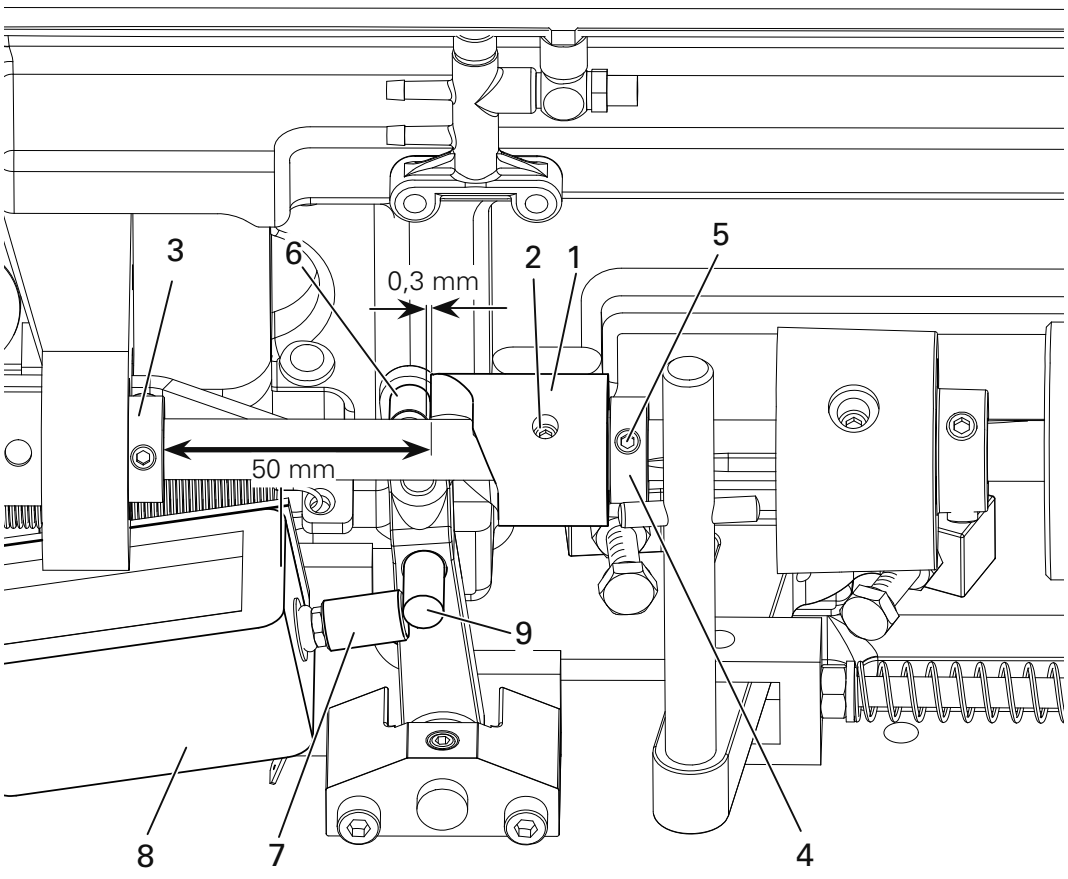

Fig. 1 - 33

- Create a distance of **50 mm** between the highest point of control cam **1** (screws **2**) and collar **3**.
- Move collar **4** into contact along control curve **1** and tighten screws **5**.
- Turn the handwheel in the direction of rotation until the highest point of control cam **1** is opposite roller **6**.
- Ensure that plunger **7** is at the leftmost position, move magnet **8** (two screws) according to requirement **1**.
- Turn control cam **1** (screws **2**) according to requirement **2**.

1.07.02 Position of the thread catcher holder

Requirement

1. There should be a minimum amount of play between toothed wheel **3** and toothed segment **4**.
2. Both in the neutral position and the foremost position of the catcher, the distance between the toothed segment **4** and the outer edge of the thread catcher holder **1** should be the same (see arrow).

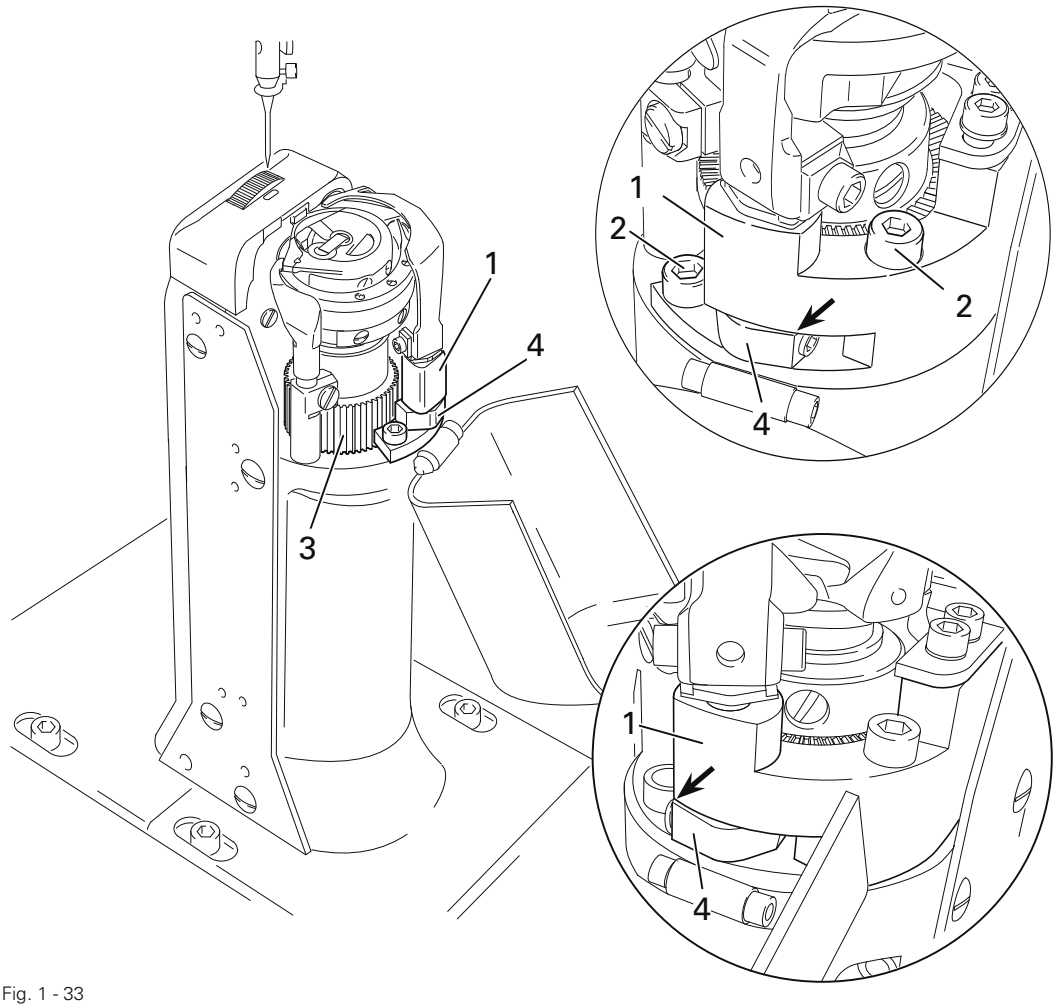

Fig. 1 - 33

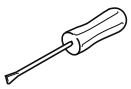

- Adjust the thread catcher holder **1** (screws **2**) according to the **requirements**.

If **requirement 2** cannot be fulfilled, loosen screw **2** and move the toothed segment **4** by one tooth.

1.07.03 Distance between thread catcher and needle plate

Requirement
During its swivel movement thread catcher **1** should not pass the edge of the needle plate (see arrow in magnification).

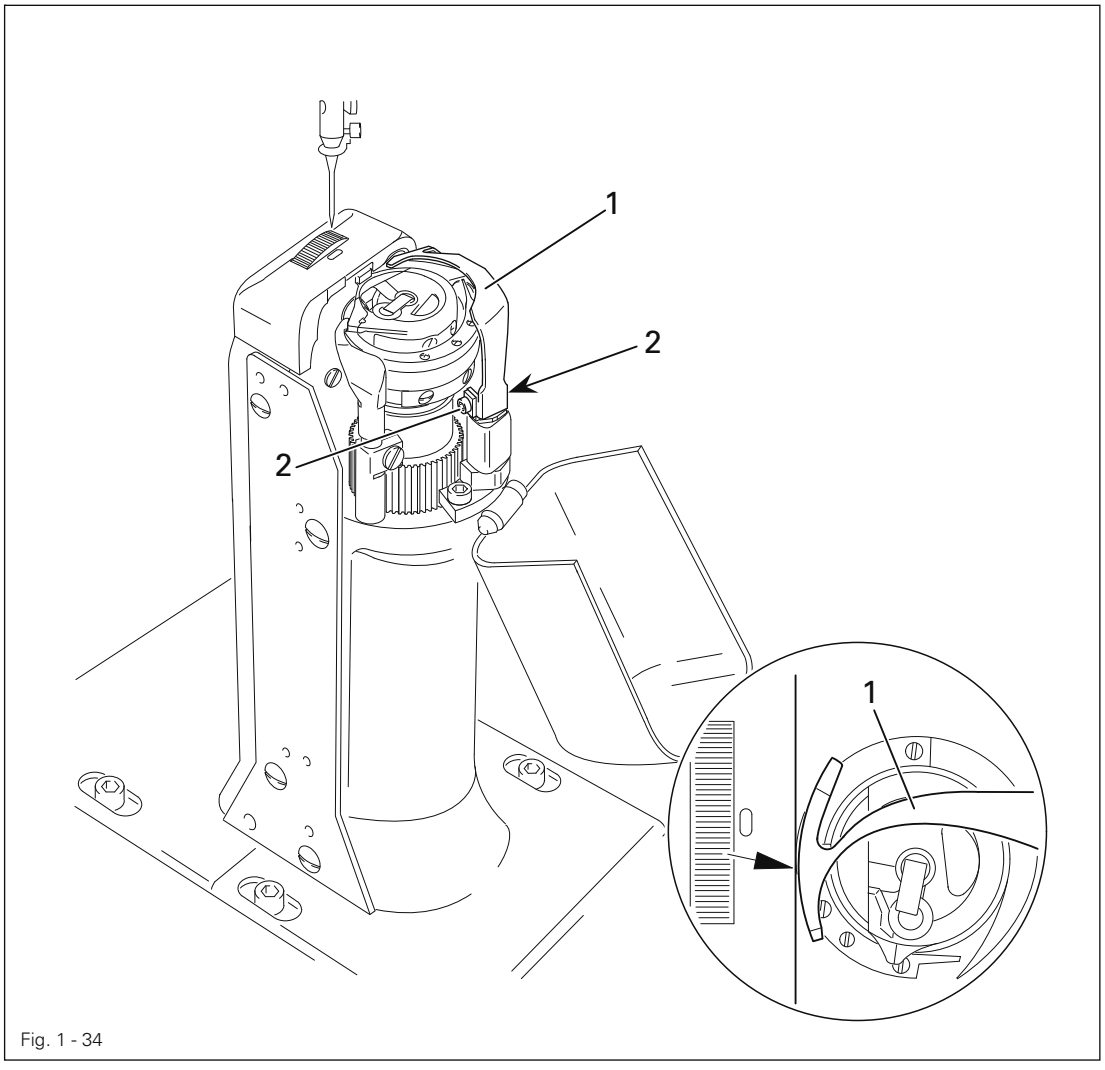

Fig. 1 - 34

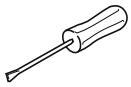

- Move thread catcher **1** (screws **2**, two screws) parallel to the thread catcher holder in accordance with the **requirement**.

1.07.04 Position of the thread catcher

Requirement

1. The bottom edge of the thread catcher **1** should be at a distance of **0.1 mm** from the positioning finger of the bobbin case **5**.
2. When the thread trimmer is in its neutral position, the rear edge of thread catcher should be positioned approx. **2.5 - 3 mm** behind the edge of the knife.

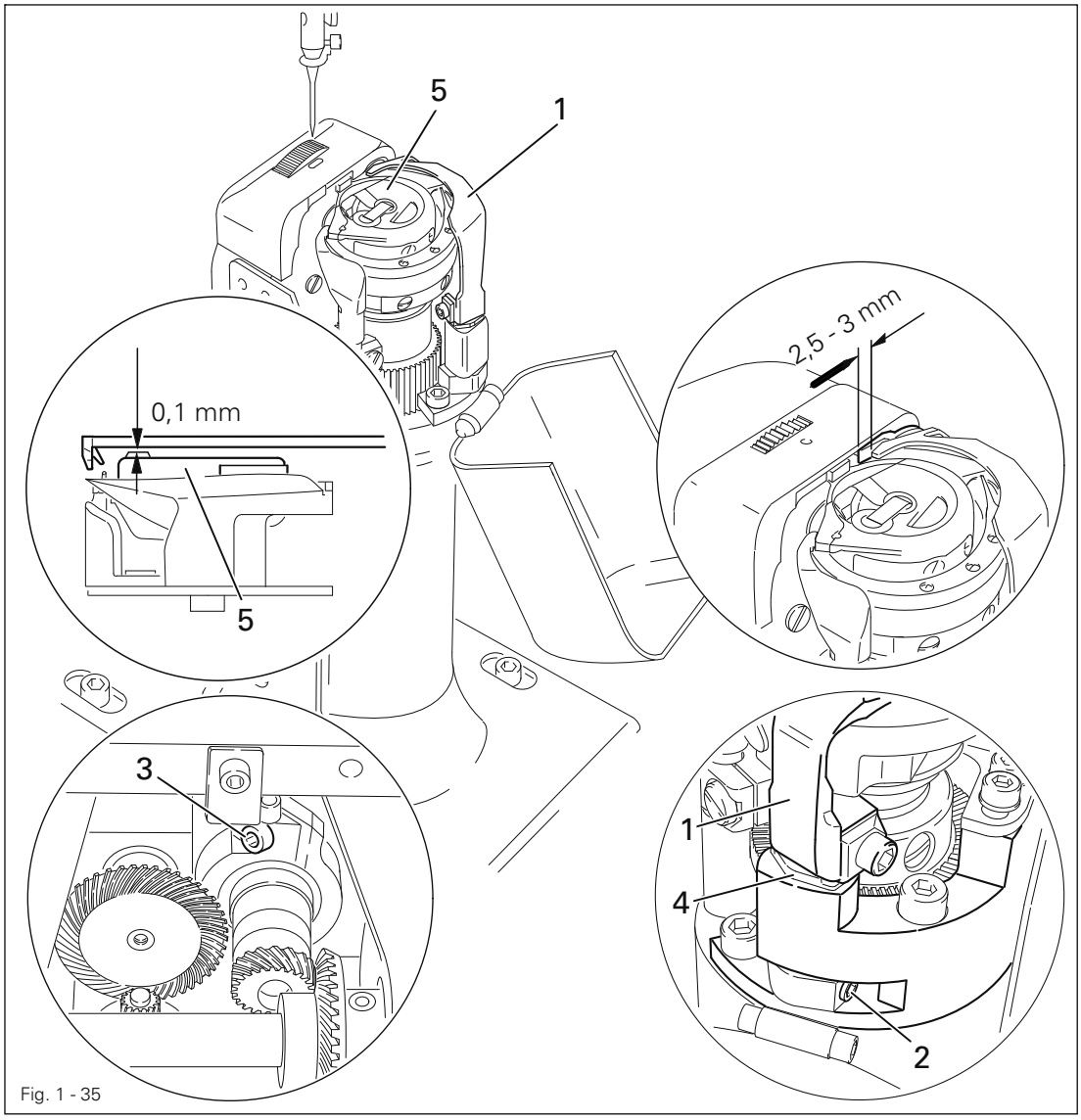

Fig. 1 - 35

- Move thread catcher **1** (screws **2**, two screws) in accordance with **requirement 1**.
- Turn thread catcher **1** (screw **3**) in accordance with **requirement 2**.

Thread catcher **1** must be parallel to the surface of the thread catcher holder **4**.

1.07.05 Knife position and knife pressure

Requirement

1. The knife **1** should be touching the needle plate.
2. The knife pressure should be set as low as possible but the cutting operation should still be carried out reliably.

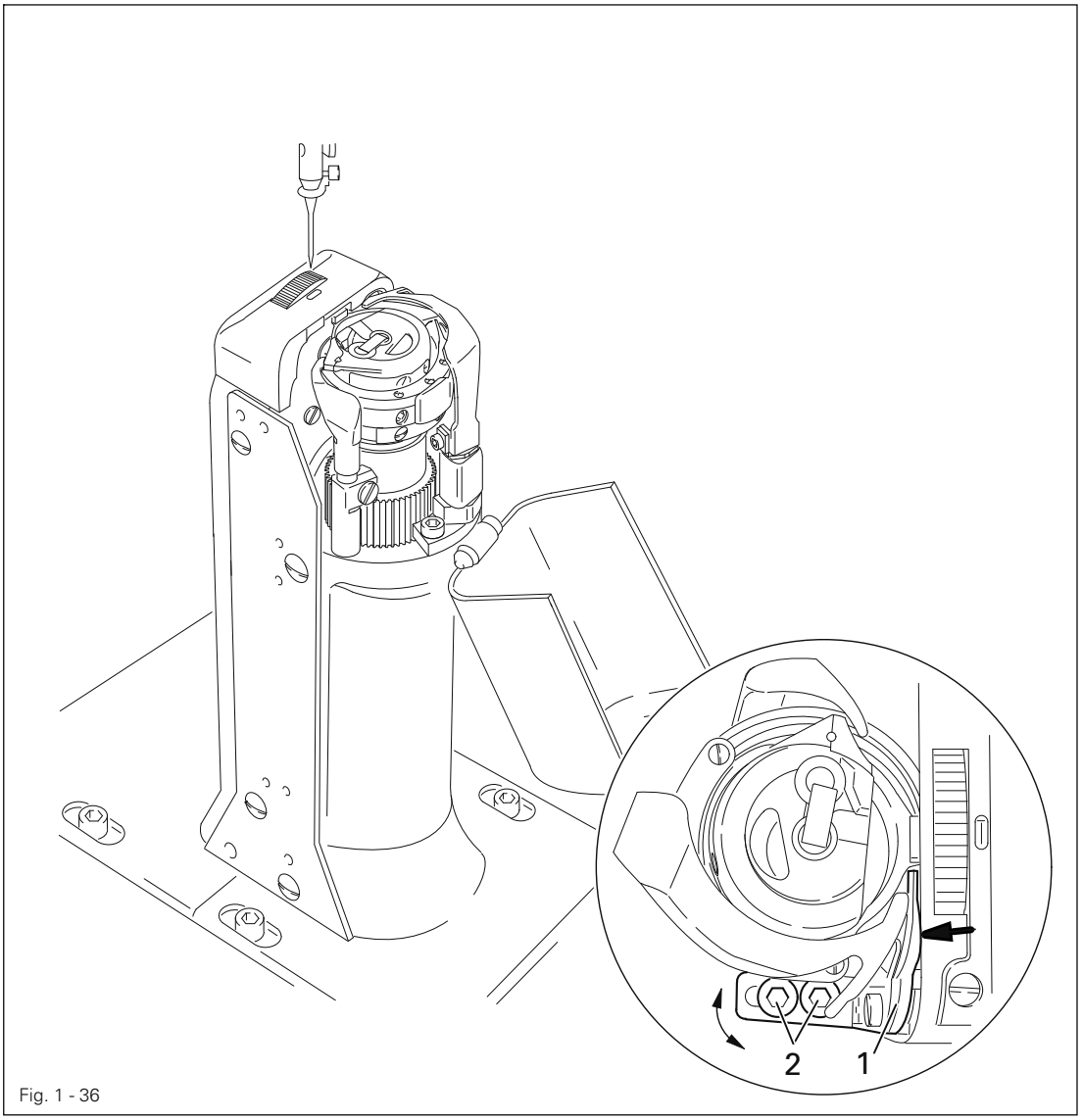

Fig. 1 - 36

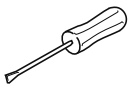

- Move knife **1** (screws **2**) in accordance with **requirement 1** or swivel it in accordance with **requirement 2**.

1.07.06 Bobbin thread retaining spring

Requirement

1. The bobbin thread clamp spring should be guided reliably in the thread groove of the thread catcher 3.
2. The tension of the bobbin thread spring clamp should be as low as possible, but the bobbin thread should be held reliably after the cutting operation.

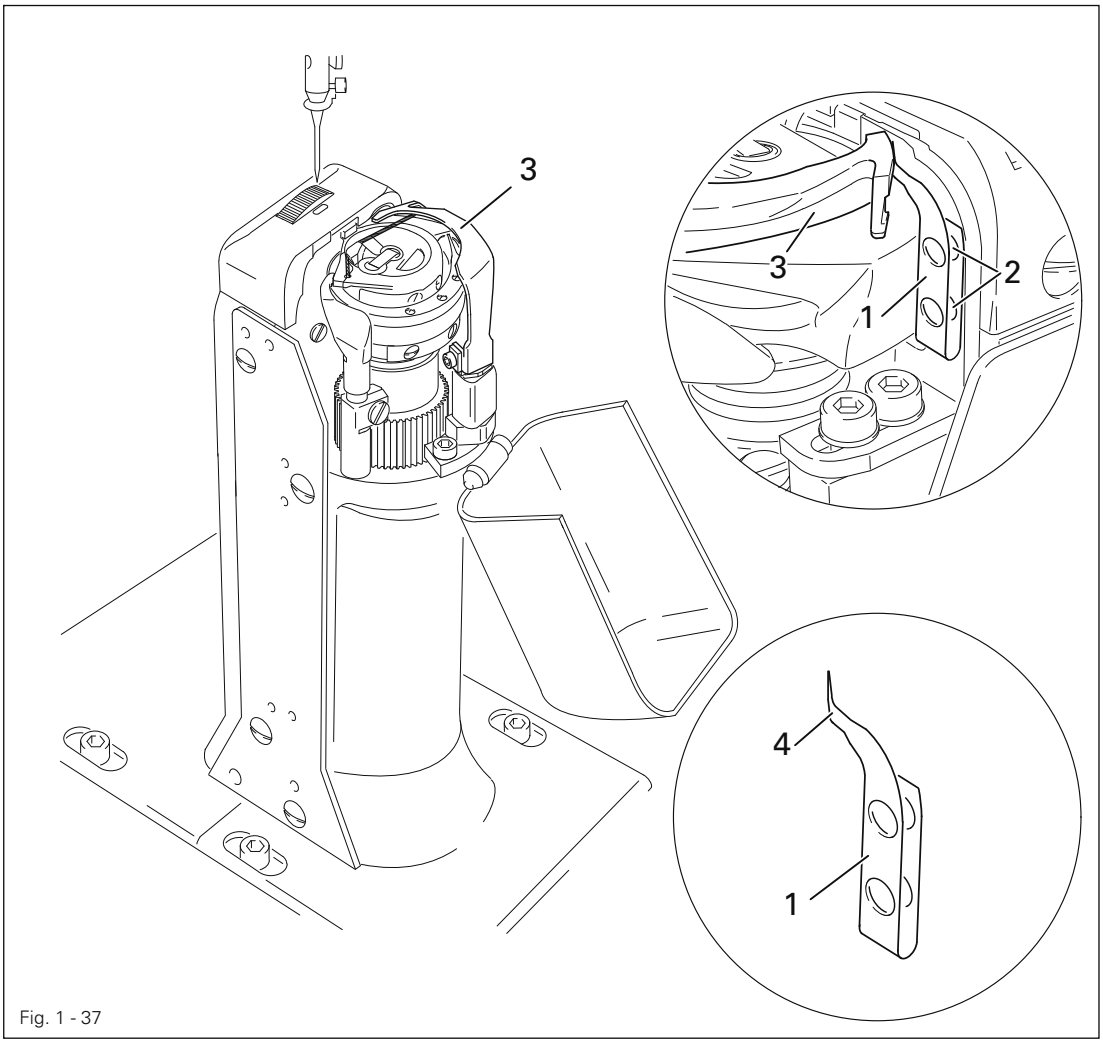

Fig. 1 - 37

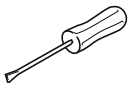

- Adjust bobbin thread clamp spring **1** (screws **2**) in accordance with **requirement 1**.
- Adjust the tension in accordance with **requirement 2** by bending side **4** of the bobbin thread clamp spring **1**.

Control - requirement 1

- Switch off the machine and bring the take-up lever to its b.d.c.
- Engage and disengage the thread catcher **3** by hand and check **requirement 1**. Adjust if necessary.

Control - requirement 2

- After the thread has been cut, sew a few stitches by turning the balance wheel, checking whether the bobbin thread is drawn out of the bobbin thread clamp spring between the **1**st and **3**rd stitches. If necessary, correct the tension.

1.07.07 Manual cutting test

Requirement

1. When thread catcher **1** is on its forward stroke, it must not carry bobbin thread **3** forward too.
2. When thread catcher **1** is in its front position, bobbin thread **3** must be held reliably by hook **4**.
3. After the trimming action, both the needle thread and the bobbin thread must be perfectly cut and bobbin thread **3** retained.

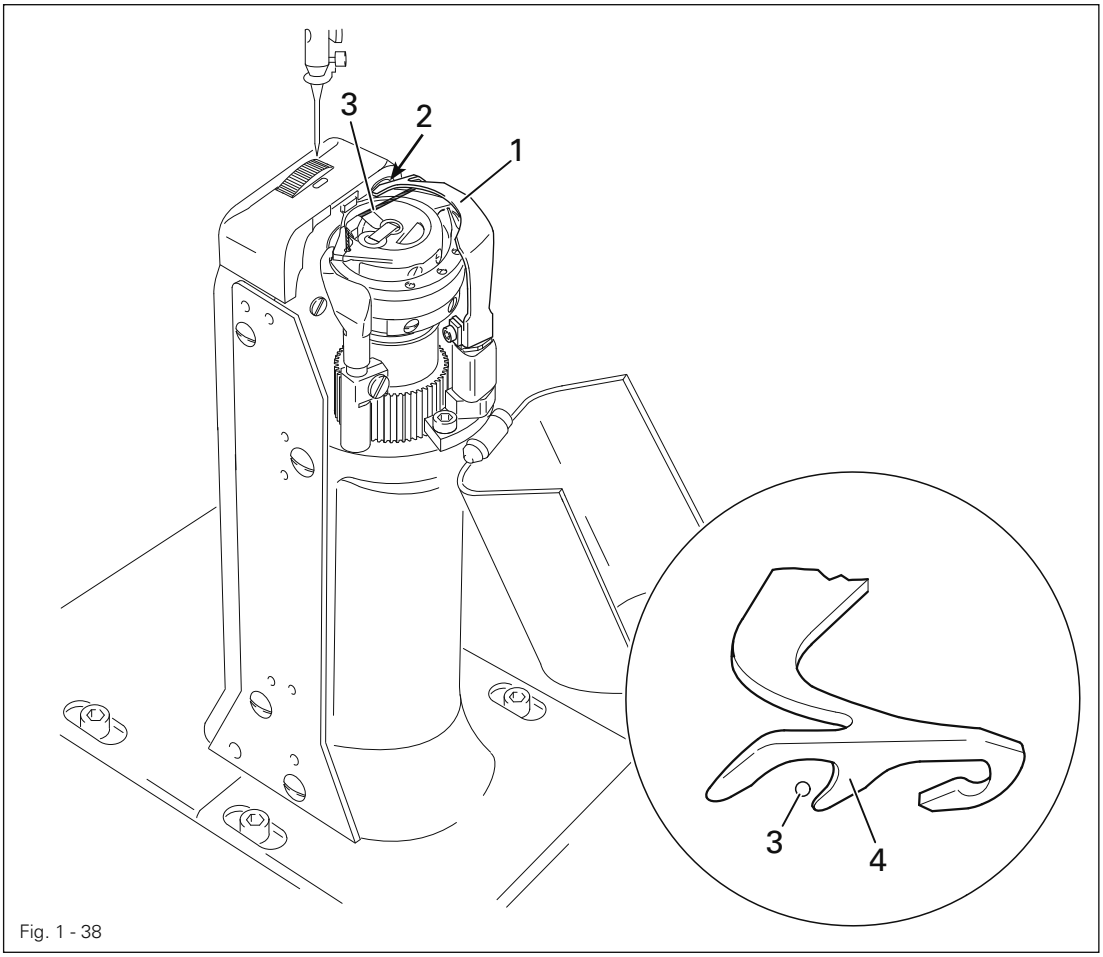

Fig. 1 - 38

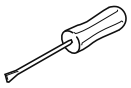

- Sew a few stitches.
- Turn off the on/off switch.
- Carry out the cutting operation manually.
- Check **requirement 1** and **2**, and if necessary readjust thread catcher **1** in accordance with Chapter **1.07.04** Position of the thread catcher.
- Check **requirement 3**, and if necessary readjust the bobbin thread retaining spring **2** in accordance with Chapter **1.07.06** Bobbin thread retaining spring.

1.07.08 Linkage rod (only for the PFAFF 2574 ME)

Requirement
When the thread trimmer is in its resting position, the drive levers 1 must be parallel.

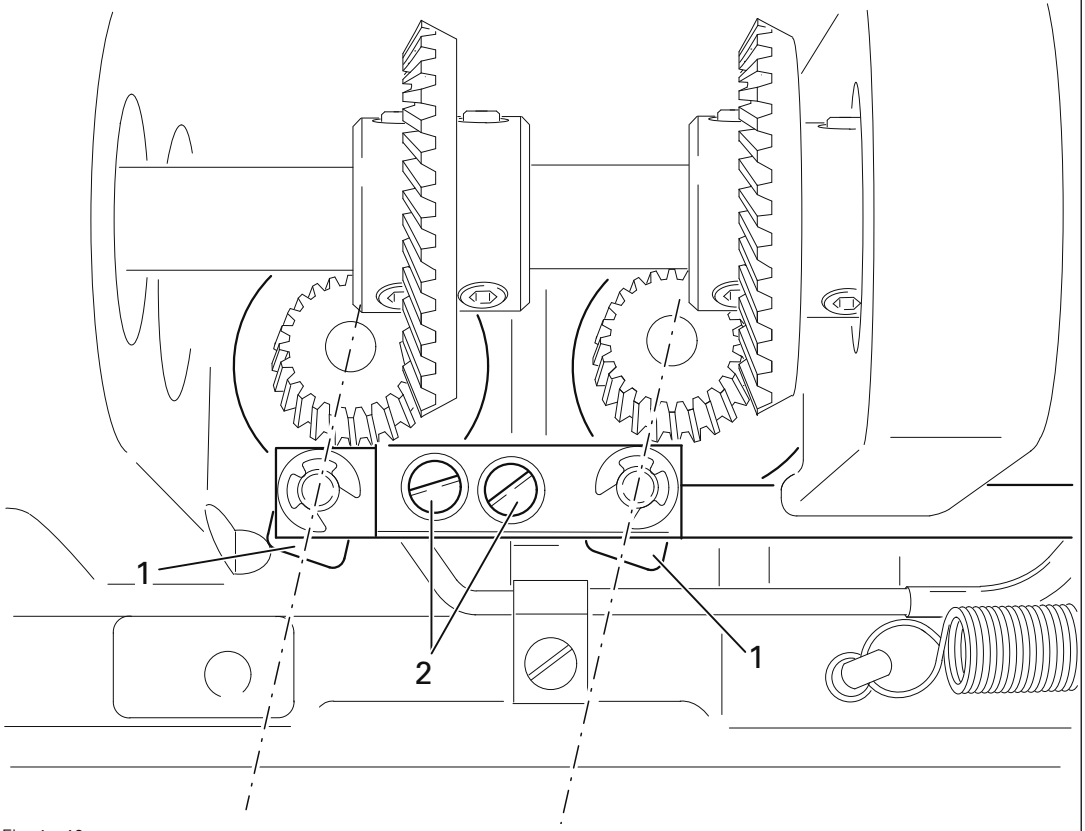

Fig. 1 - 40

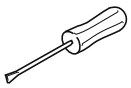

- Adjust drive levers 1 (screws 2) in accordance with the requirement.

1.08 List of parameters for control P320 / P321

The operator has free access to the "100" parameters.
Parameters "200" - "800" can only be changed after entering a code number and many only be changed by authorised personnel.

Group	Parameter	Description	Setting range	Set value
1	101	Pedal controlled start backtack (I = OFF, II = ON)	I - II	I
	102	Reverse rotation (I = OFF, II = ON)	I - II	I
	103	Placed stitch (I = OFF, II = ON)	I - II	I
	104	Bobbin thread monitoring (0 = Off, 1 = Counter)	0 - 1	1
	105	Bobbin thread counter (2500 ME PREMIUM only)	0 - 99999	12000
	106	Bobbin thread remaining counter (2500 ME PREMIUM only)	0 - 999	100
	107	Stitch length adjustment (2500 ME PLUS only)	-0,2 - +0,2 mm	0
	108	Display main processer software version		
	109	Display step motor processor software version		
	110	Display control panel software version		
	111	Display sewing drive component software version		
	112	Control panel key tone (2500 PREMIUM only), (I = OFF, II = ON)	I - II	II
	113	Control panel key tone when moving from one area to another (2500 PREMIUM only), (I = OFF, II = ON)	I - II	I
	116	Display serial number of machine	-	-
2	201	Machine configuration 8 = 2571, 2591, 9 = 2571, 2591 with photo cell, 10 = reserved, 11 = reserved, 12 = 2574 13 = 2574 with photo cell	8 - 14	8

Group	Parameter	Description	Setting range	Set value
2	202	Roller-presser field discharge (OFF = I, ON = II) I = roller-presser is lowered slowly. Should be set for high foot pressure II = roller-presser is lowered quickly. Should be set for low foot pressure	I - II	I
	203	Single stitch button assignment 1 = Single stitch, 2 = Needle up, 3 = Knee switch	1 - 3	1
	204	Half stitch button assignment 1 = Half stitch, 2 = Needle up, 3 = Knee switch	1 - 3	1
	205	Button F1 assignment (2500 ME only) (I = Backtack suppression, II = Raise needle)	I - II	I
	206	Open thread tension on stop and lift roller-presser (I = OFF, II = ON)	I - II	I
	207	Open thread tension after trimming and lift roller-presser (I = OFF, II = ON)	I - II	I
3	301	Thread carrier position t.d.c.		
		2571, 2591	0 - 127	124
		2574	0 - 191	1
	302	Needle position under b.d.c.		
		2571, 2591	0 - 127	16
		2574	0 - 191	30
	303	Thread trimmer magnet position on		
		2571, 2591	0 - 127	16
		2574	0 - 191	30
	304	Thread trimmer magnet position pulse		
		2571, 2591	0 - 127	93
		2574	0 - 191	83

Group	Parameter	Description	Setting range	Set value
3	305	Thread trimmer magnet position off		
		2571, 2591	0 - 127	113
		2574	0 - 191	173
	306	Reverse rotation position		
		2571, 2591	0 - 127	93
		2574	0 - 191	173
	307	Placed stitch position		
		2571, 2591	0 - 127	7
		2574	0 - 191	7
	308	Thread tension ventilation position		
		2571, 2591	0 - 127	30
		2574	0 - 191	160
4	401	Time delay roller-presser lift	0,01s - 1,5s	0,02s
	402	Delayed start after lowering roller-presser	0,01s - 1,5s	0,15s
	403	Set roller-presser lift (must be increased for high foot pressure)	0,01s - 0,2s	0,03s
	404	Thread trimmer magnet pulse	10 -50%	35%
5	501	Maximum speed		
		2571, 2591	100 - 3500	3500
		2574	100 - 2600	2600
	502	Start backtack speed	100 - 1500	700
	503	End backtack speed	100 - 1500	700
	504	Soft start speed	100 - 3500	1500
	505	Soft start stitch	0 - 15	0
6	601	Move roller-presser and feed wheel step motor		

Group	Parameter	Description	Setting range	Set value
600	602	Inputs: 0123456789ABCDEF (2571, 2574, 2591 PREMIUM only), 0 = Needle mid point (E16) 1 = Needle mid point (E15) 2 = Intermittent coding (E14) 3 = Free (E13) 4 = Free (E12) 5 = Free (E11) 6 = Free (E10) 7 = Free (E9) 8 = Emergency button (E8) 9 = Free (E7) A = Knee switch (E6) B = Photo cell (E5) C = Starting inhibitor (E4) D = Single stitch button on machine head (E3) E = Half stitch button on machine head (E2) F = Reverse button on machine head (E1)		
	603	Machine drive in home position see set-up-instructions	0 - 127	8 ± 2
	604	Run cold start		
	605	Stitch process with step motors by handwheel		
	606	Display speed control unit value		
7	701	P-section speed regulator		
		2571, 2591	1 - 50	30
		2574	1 - 50	20
	702	I-section speed regulator	0 - 100	50
	703	P-section position regulator	1 - 50	20
	704	D-section position regulator	1 - 100	30
	705	Time for position regulator	0 - 100	25
	706	P-section position regulator for remainder brake	1 - 50	25
	707	D-section position regulator for remainder brake	1 - 50	15
	708	Maximum torque for remainder brake	0 - 100	0
	709	Minimum machine speed	3 - 64	6

Group	Parameter	Description	Setting range	Set value
700	710	Maximum machine speed		
		2571, 2591	1 - 35	35
		2574	1 - 26	26
	711	Maximum motor speed		
		2571, 2591	1 - 35	35
		2574	1 - 40	40
	712	Positioning speed	3 - 25	18
	713	Acceleration ramp	1 - 50	35
	714	Braking ramp	1 - 50	30
	715	Reference position		
		2571, 2591	0 - 127	10
		2574	0 - 191	35
	716	Dead man time	0 - 255	40
	717	Motor starting current	3 -10	8
	718	Vibration filter	1 -10	6
	719	Assign direction of rotation	0 - 1	0
	720	Move positioner	1 - 2	2
800	801	Function group 100 access authorisation (Operator level)	0 - 1	0
	802	Function group 200 access authorisation (Technician level)	0 - 1	1
	803	Function group 300 access authorisation (Sewing motor positions)	0 - 1	1
	804	Function group 400 access authorisation (Times)	0 - 1	1
	805	Function group 500 access authorisation (Counter and revolution speed)	0 - 1	1
	806	Function group 600 access authorisation (Service)	0 - 1	1
	807	Function group 700 access authorisation (Sewing motor)	0 - 1	1
	808	Function group 800 access authorisation (Access authorisation)	0 - 1	1
	809	Programming access authorisation	0 - 1	1
	810	Input access code	0 - 9999	2500

1.09 Error Messages and Description

Error	Description
E 1	System error
E 2	Sewing motor E002/BB/xxx BB = 20: Deadman 02: Position forwards 03: Position in reverse 05: Position by shortest route 09: Write parameter 10: Speed 0A: Reset stitch counter 0B: Stop after xxx stitches 30: Timeout for increasing speed 31: Timeout from uncertain positioning 32: Timeout from deadman command 33: Timeout for deleting errors 34: Timeout for emergency stop 35: Timeout for writing parameters 36: Timeout for resetting stitch counter 37: Timeout for stop command after x stitches 38: Timeout for initialisation 39: Establishing contact when turned on xxx = sewing motor control unit error byte (see Motor Errors)
E 3	Section
E 4	End of section
E 5	Pedal or half stitch button or single stitch button (on machine head) activated when machine turned on
E 6	Communication error with the step motor processor
E 7	End of ramp
E 8	Needle drive end point not found
E 9	Needle drive mid-point not found
E 10	Step motor processor error
E 11	Step motor step frequency too high
E 12	Sewing displacement error
E 13	Docu-seam system error
E 14	Incorrect program number (larger than 99)
E 15	Incorrect section number
E 16	Memory full
E 17	Incorrect stitch length
E 18	Unused
E 19	External control interface
E 20	Incorrect control
E 21	Power supply unit overloaded (24V)
E 22	Mains voltage
E 23	Power supply 24V too low

Error	Description
	Error in SD-memory card reader
Error 27 - 1	No SD-memory card inserted
Error 27 - 2	Wrong card (does not match the machine)
Error 27 - 3	Card not inserted correctly
Error 27 - 4	Card with write protection
Error 27 - 5	Data error on SD-memory card
Error 27 - 6	Formatting failed
Error 27 - 7	File does not match the machine
Error 27 - 8	Incorrect file size
Error 27 - 9	Transfer error
Error 27 - 10	Data could not be deleted

1.10 Motor Errors

Error	Description
33	Invalid parameter value
35	Communication error
36	Init not ready
37	Command overrun
64	Mains off during initialisation
65	Excess current directly after mains on
66	Short circuit
68	Excess current during operation
70	Motor blocked
71	No incremental plug
74	Incremental transducer missing for transmission/reduction
173	Motor blocked in 1st stitch
175	Interior starting error
222	Dead man monitoring

1.11 Updating the machine software via internet

The machine software can be updated with PFAFF flash programming. For this purpose the PFP boot program (from **version 3.25** on) and the appropriate control software for the machine type must be installed on a PC. The transfer of the data to the machine can be carried out with a null modem cable (part no. **91-291 998-9**1) or with an SD-card. The SD-card must be formatted in the **FAT**16 format and must not exceed a capacity of 2 **GBytes**.

The PFP boot program and the control software of the machine type can be downloaded from the PFAFF-homepage using the following path:
www.pfaff-industrial.de/pfaff/de/partnerweb/downloadsoftware

1.11.01 Updating 2500 ME PLUS (with null modem cable)

- After downloading the PFP tool and the control software, open the PFP program.
- Select the **machine type** and under control unit **P321**.
- The software version is displayed under **report**.

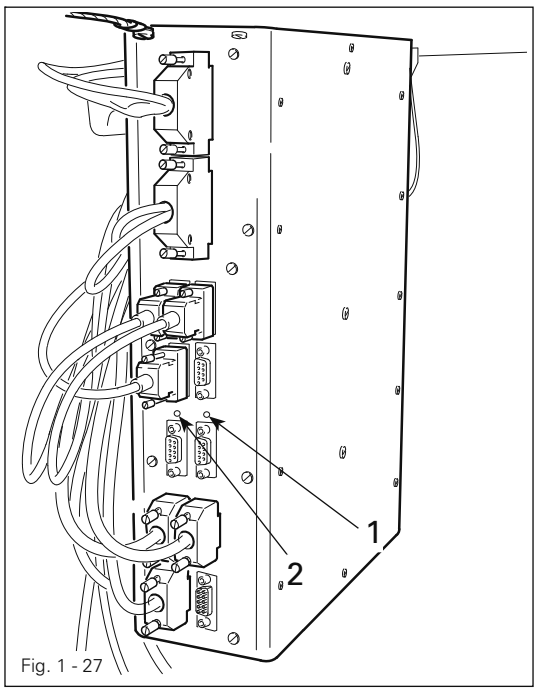

Fig. 1 - 27

- Switch off the machine.
- Connect the PC (serial interface or appropriate USB-adapter) and the machine control unit (**RS232**). To do so disconnect the plug of the control panel.

While the machine software is being updated, no setting up, maintenance or adjustment work may be carried out on the machine!

- Depending on which software is to be up-dated, hold down boot key **1** or **2** and switch on the machine.
  1 = for machine controller
  2 = for stepping motors
- Press the "OK" button.

The software update is carried out, the update progress is shown on the bar display of the PFP boot program.

- During the up-dating procedure the machine must not be switched off.
- When the update has been completed, switch off the machine and end the PFP boot program.
- End the connection between the PC and the machine control unit and reconnect the control panel to the machine control unit.
- Switch on the machine.
  A plausibility control is carried out and, if necessary, a cold start.

More information and assistance is at your disposal in the file "PFPHILFE.TXT", which can be called up from the PFP boot program by pressing the "help" button.

1.11.02 Updating 2500 PREMIUM (with SD card)

- After downloading the PFP tool and the control software, open the PFP program.
- Select the machine type and under control unit SD-CARD.
- The software version is displayed under report.

- Under **programming** copy the software to the drive with the SD-card.
- With the machine switched off insert the SD-card into the control panel.

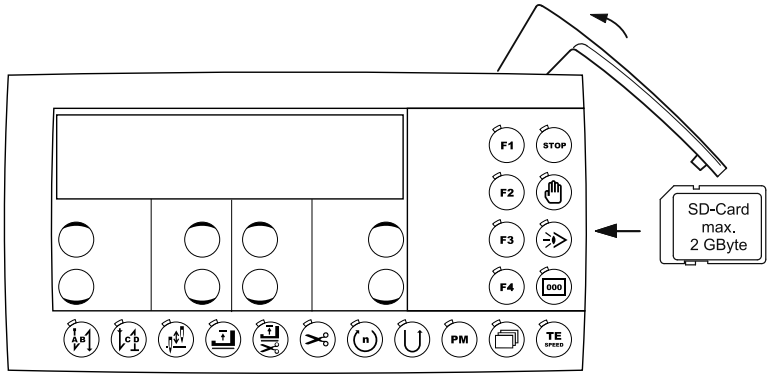

To update the machine software carry out the following steps:

While the machine software is being updated, no setting up, maintenance or adjustment work may be carried out on the machine!

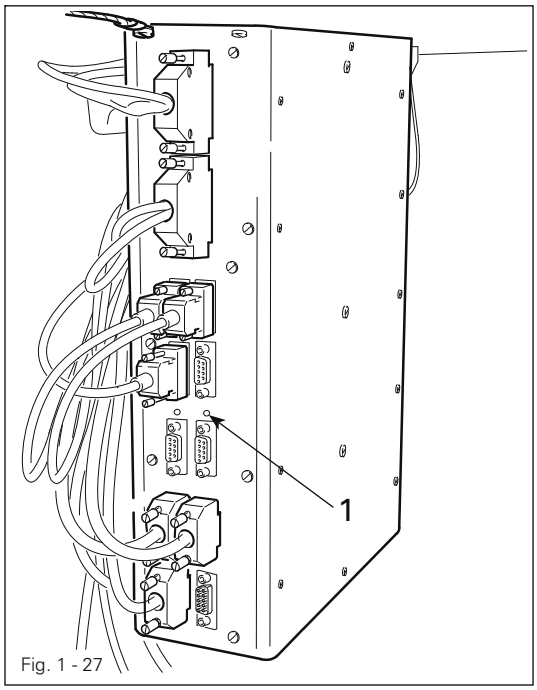

Fig. 1 - 27

- witch on the machine, keeping the boot key **1** pressed.
- Press the "TE" key.
  The software update is carried out. During the updating process the diode in the memory card slot flashes.
- During the updating process the machine must not be switched off.
- When the update has been completed, switch off the machine and remove the SD-card.
- Switch on the machine
- A plausibility control is carried out and, if necessary, a cold start.
- To update the step motor software please contact your PFAFF representative.

More information and assistance is at your disposal in the file "PFPHILFE.TXT", which can be called up from the PFP boot program by pressing the "help" button.

2 Circuit diagrams

Reference list for circuit diagrams 91-191 544-95

A1	PFAFF P 321ED Control Device
A2	PICOTOP or BDF S3 Control Panel
A14	OTE (Sewing Head Auto Select)
DX355	Needle pendulum
H1	Sewing lamp
M1	Sewing motor
M2	Feed wheel step motor
M3	Roller-presser step motor
M4	Needle step motor
Q1	Main switch
S1	Treadle speed control unit
S20	Knee switch
S24	Starting inhibitor button
S41	Hand operation front button
S42	Single stitch button (change needle position)
S43	Thread tension release (FSL)
S44	Automatic presser foot lift (PFA)
X1	Mains plug
X1A	RS232 – control panel interface 1
X1B	VSS OTE
X3	Incremental encoder (sewing motor)
X4A	Feed wheel step motor
X4B	Roller-presser step motor
X5	Inputs
X6A	Needle step motor
X6B	RS232 – interface
X8	Sewing motor
X11A	CAN interface
X11B	Treadle speed control unit
X13	Outputs
Y1	-910/.. PFA
Y2	-900/.. Thread trimmer
Y3	Thread tension release

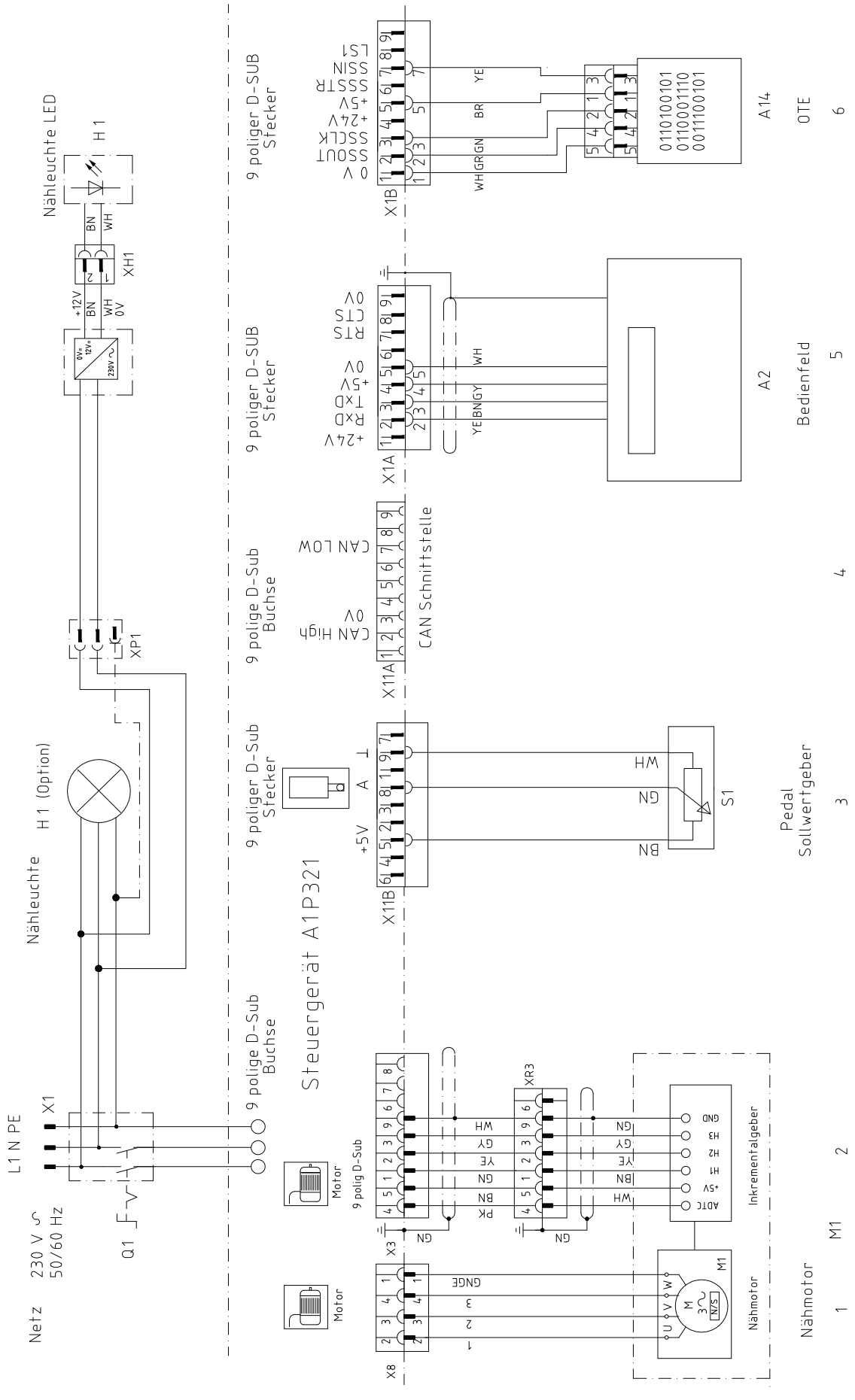
Netz
230 V ∿
50/60 Hz
L1 N PE
X1
Q1
Nähleuchte
H 1 (Option)
XP1
Nähleuchte LED
H 1
XH1
+12V
BN
WH
0V
9 polige D-Sub Buchse
9 poliger D-Sub Stecker
Steuergerät A1P321
Motor
9 polig D-Sub
X3
X8
XR3
Nähmotor
M1
Inkrementalgeber
ADTC
+5V
H1
H2
H3
GND
X11B
+5V
A
⊥
X11A
CAN High
0V
CAN LOW
CAN Schnittstelle
X1A
+24V
RxD
TxD
+5V
0V
RTS
CTS
0V
X1B
0 V
SSOUT
SSCLK
+24V
+5V
SSSTR
SSIN
LS1
YE
BR
GN
GR
WH
A2
Bedienfeld
A14
OTE
S1
Pedal
Sollwertgeber
1
2
3
4
5
6

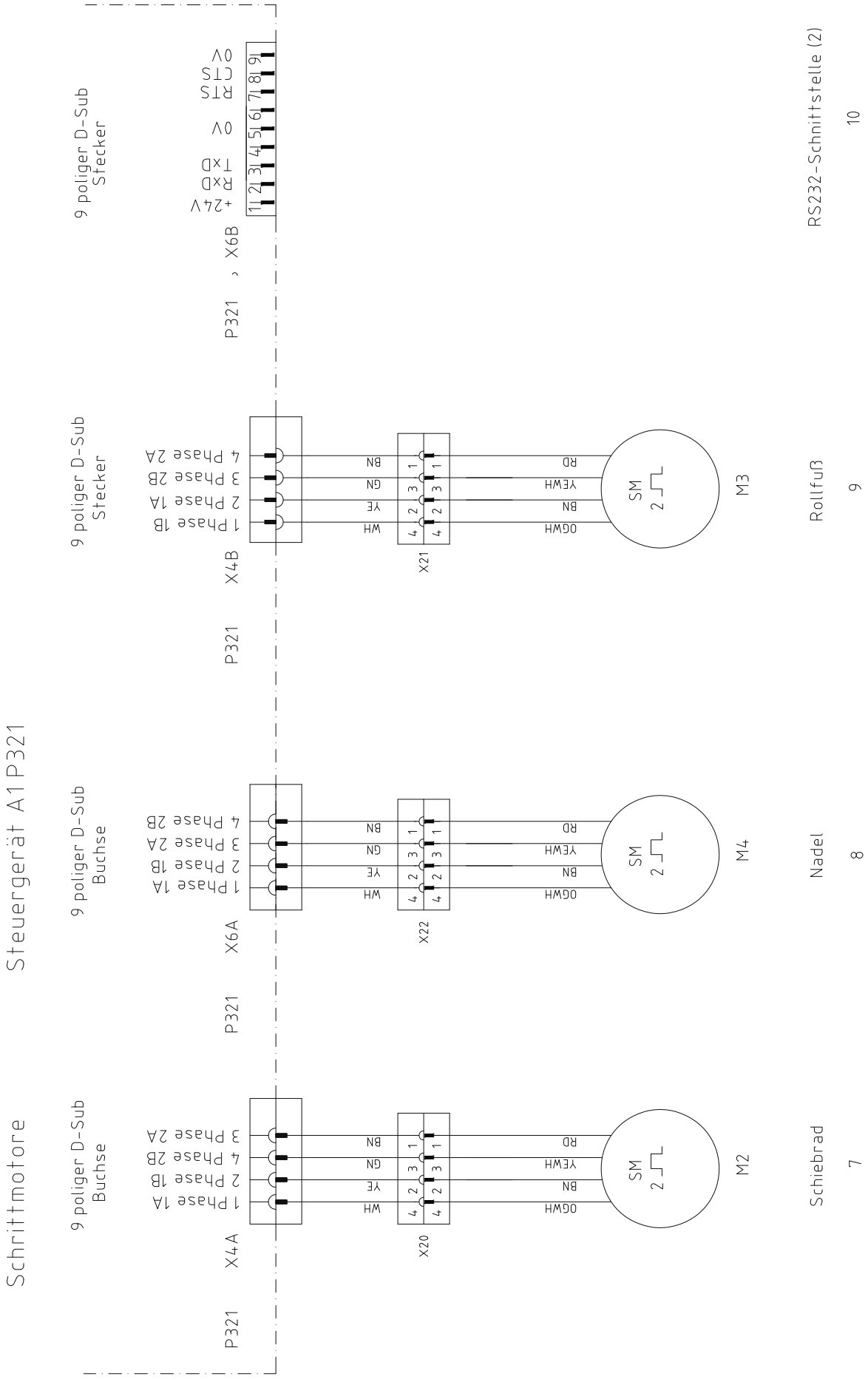
Schrittmotore
Steuergerät A1 P321
9 poliger D-Sub Buchse
9 poliger D-Sub Stecker
P321
X4A
X6A
X4B
X6B
1 Phase 1A
2 Phase 1B
3 Phase 2A
4 Phase 2B
+24V
RxD
TxD
0V
RTS
CTS
0V
X20
X22
X21
WH
YE
GN
BN
OGWH
YEWH
RD
SM
M2
M4
M3
Schiebrad
Nadel
Rollfuß
RS232-Schnittstelle (2)
7
8
9
10

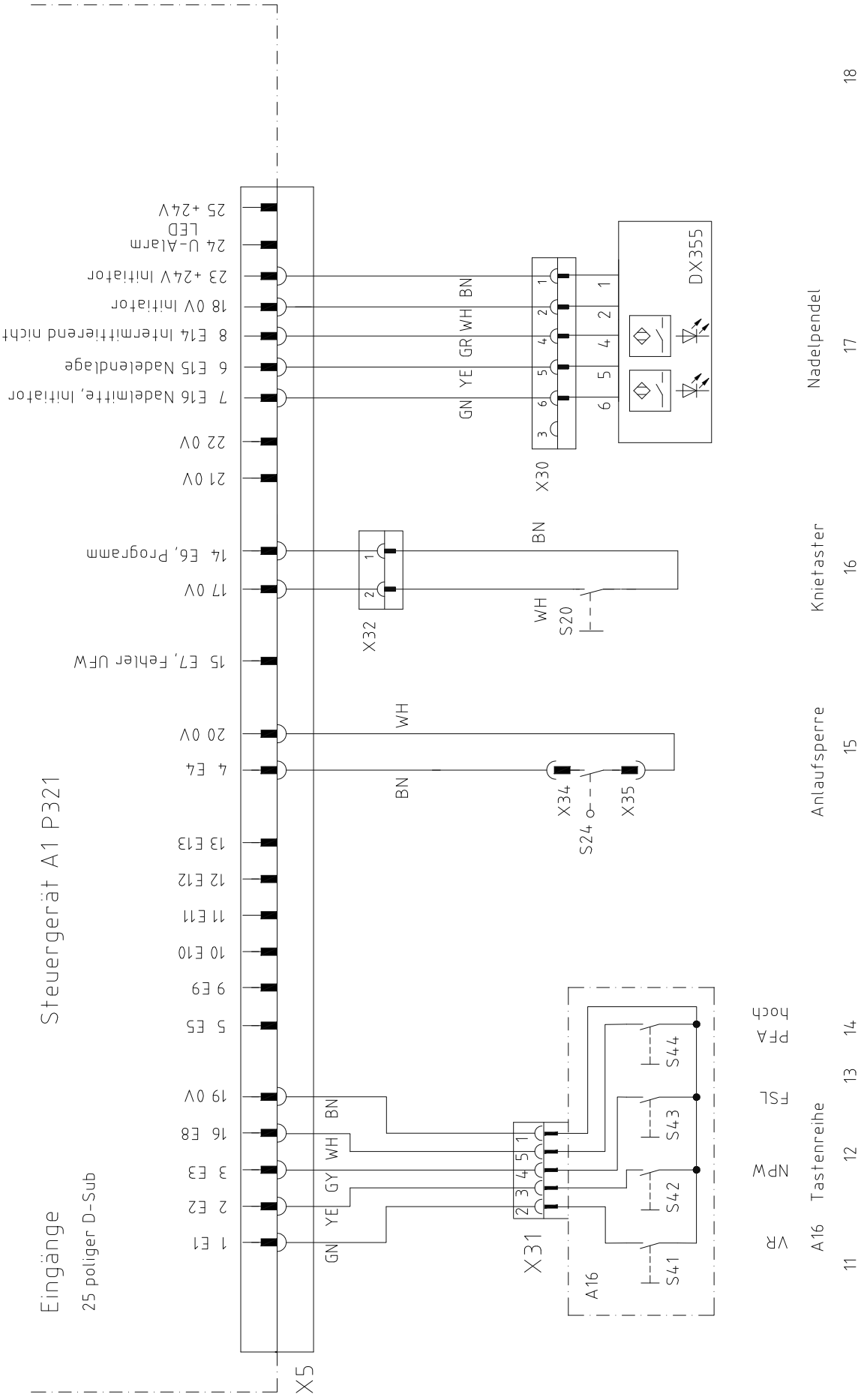
Steuergerät A1 P321
Eingänge
25 poliger D-Sub
X5
1 E1
2 E2
3 E3
16 E8
19 0V
5 E5
9 E9
10 E10
11 E11
12 E12
13 E13
4 E4
20 0V
15 E7, Fehler UFW
17 0V
14 E6, Programm
21 0V
22 0V
7 E16 Nadelmitte, Initiator
6 E15 Nadelendlage
8 E14 Intermittierend nicht
18 0V Initiator
23 +24V Initiator
24 U-Alarm LED
25 +24V
GN YE GY WH BN
X31
A16
S41
S42
S43
S44
VR
NPW
FSL
PFA hoch
A16 Tastenreihe
11
12
13
14
X34
X35
S24
Anlaufsperre
15
X32
S20
Knietaster
16
X30
DX355
Nadelpendel
17
18

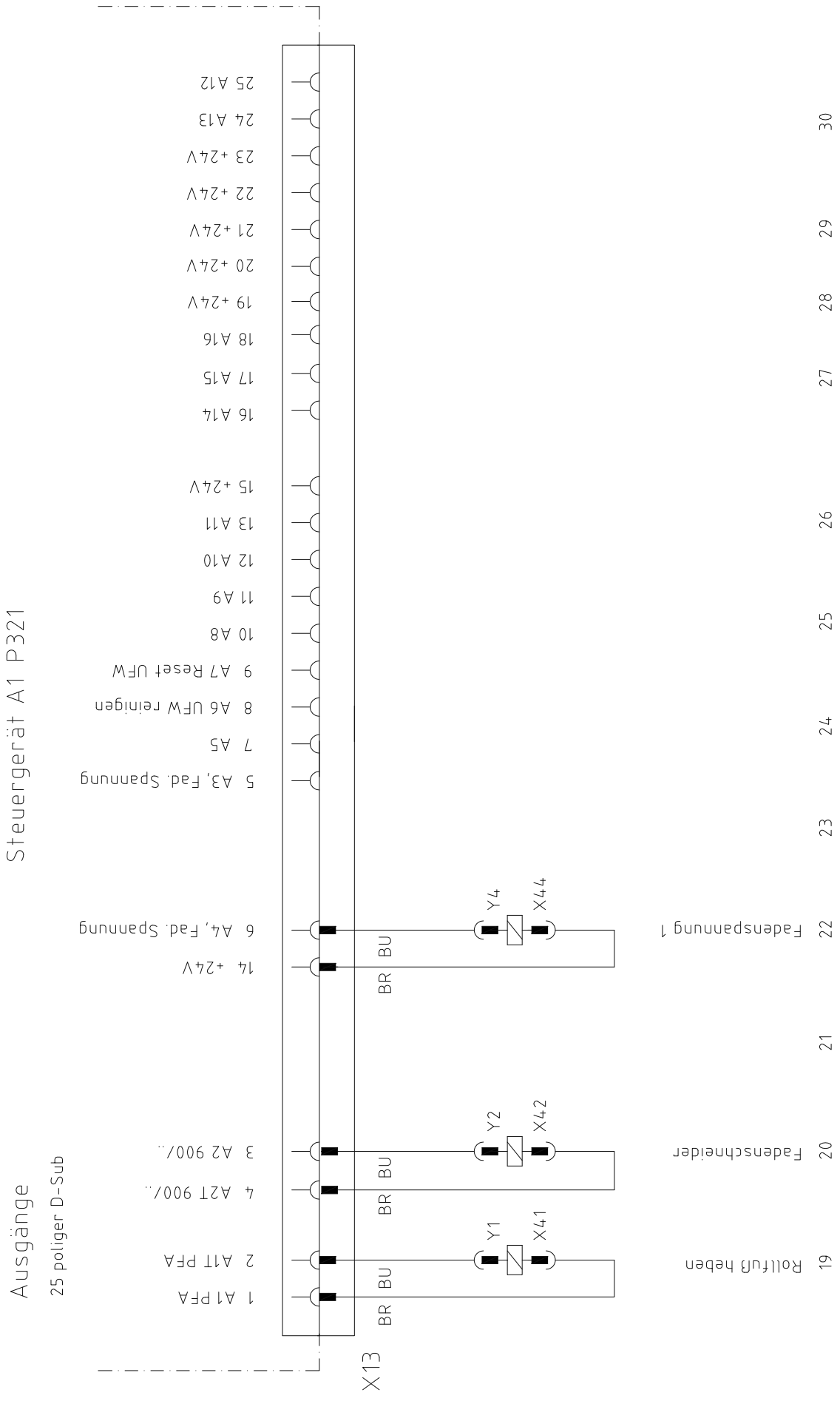
Steuergerät A1 P321
Ausgänge
25 poliger D-Sub
X13
1 A1 PFA
2 A1T PFA
3 A2 900/..
4 A2T 900/..
5 A3, Fad. Spannung
6 A4, Fad. Spannung
7 A5
8 A6 UFW reinigen
9 A7 Reset UFW
10 A8
11 A9
12 A10
13 A11
14 +24V
15 +24V
16 A14
17 A15
18 A16
19 +24V
20 +24V
21 +24V
22 +24V
23 +24V
24 A13
25 A12
BR BU
BR BU
BR BU
Y1
Y2
Y4
X41
X42
X44
Rollfuß heben
Fadenschneider
Fadenspannung 1
19
20
21
22
23
24
25
26
27
28
29
30

PFAFF® Industrial

Europäische Union
Wachstum durch Innovation – EFRE

PFAFF Industriesysteme
und Maschinen AG

Hans-Geiger-Str. 12 - IG Nord
D-67661 Kaiserslautern

Phone: +49-6301 3205 - 0
Fax: +49-6301 3205 1386
E-mail: info@pfaff-industrial.com

Hotlines:

Technical service:	+49-175/2243-101
Application consultance:	+49-175/2243-102
Spare-parts hotline:	+49-175/2243-103

Printed in Germany

© PFAFF Industriesysteme und Maschinen AG 2009, PFAFF is the exclusive trademark of VSM Group AB.PFAFF Industriesysteme und Maschinen AG is an authorized licensee of the PFAFF trademark.